EUREKA!

The Journal of Mining Collectibles

Issue 51 — May, 2021

Cover illustration: Mine electrical insulator, collected in an underground mine by Todd Mitchell. See article below on mine electrical insulators by Wendell Wilson.

Table of Contents:

American Glass Mine Insulators

Wendell Wilson

For the collector of mining artifacts, colored glass insulators add a particularly attractive accent to any showcase full of old brass, nickel, copper and steel mining paraphernalia. Glass insulators were first produced in the 1850s for use on telegraph lines, and later were required for telephone lines, electric power lines, and other applications. As mines became electrified toward the end of the 19th century, underground telephone lines and electric power lines had to be installed to operate mine lighting, trolleys, locomotives, cutting machines and pumps. Lines carrying low to medium-voltage current throughout a mine required the installation of special insulators into the rock or timbering overhead or high along the wall, generally spaced at 15 to 30-foot intervals.

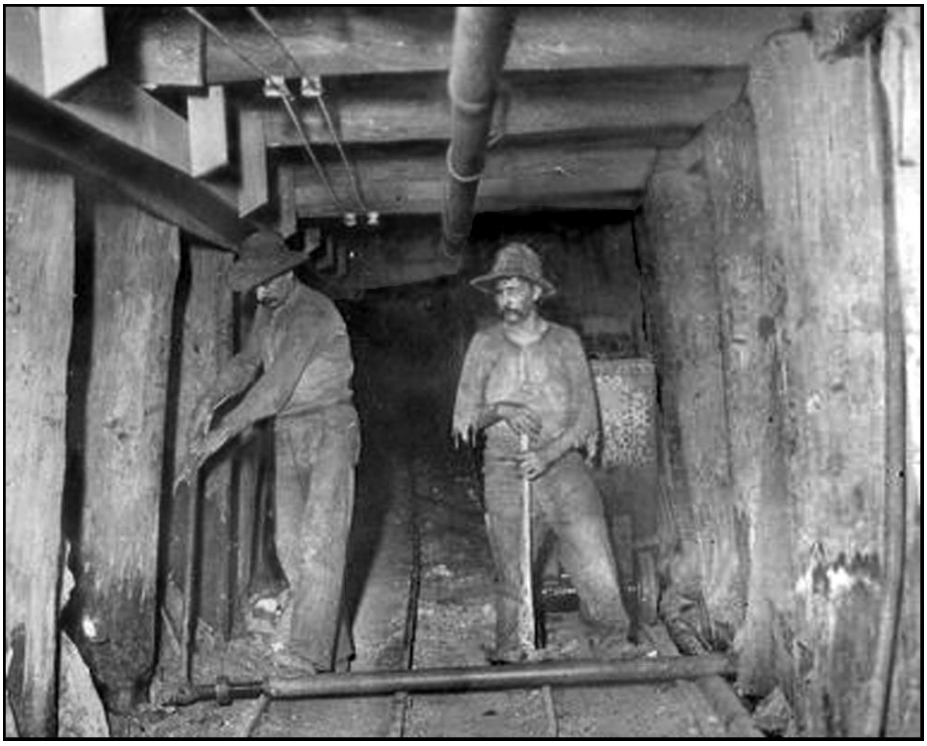

Mine insulators carrying wires in the Speculator mine, Butte, Montana. Dave Johnson collection.

Mine insulators were designed sturdy to withstand rough treatment and to have minimum conductivity that would allow current to leak away. Current leakage can be caused by water collecting on the surface of the insulator, so they were sometimes equipped with drip points (patented by Ralph G. Hemingray and James C. Gill in 1893) and usually a central drainage channel that would draw moisture away. When kept reasonably dry, glass mine insulators gave good results up to 5,000 volts.

Mine insulators have a groove around the waist for the wire and a hole for the anchor pin extending from the bottom all the way through a recessed top. For installation they were mounted on malleable iron pins hammered into the roof or high up on the wall of the mine, suspending the telephone wire or power cable out of the way of miners and ore cars.

The collecting of glass insulators of all kinds is a very active and mature hobby today, with thousands of enthusiastic collectors, excellent magazines (*Crown Jewels of the Wire*, founded in 1969, and *Drip Points*, published by the National Insulator Association), national and regional shows sponsored by the NIA, many reference books, numerous websites, several Facebook pages, regular auction availability (especially on eBay, open-wire.com, pole-top, etc.), and even problems involving fakes and artificially enhanced (irradiated or dyed) examples to beware of. Mining insulators specifically, like other phone pole and power pole insulators, are highly collectible. To facilitate discussion and categorization of the many different examples, Consolidated Design (CD) numbers were assigned by Woodward (1969) to signify the various insulator shapes, regardless of manufacturer or lettering.

OSYOR PATENT (1894)

The principal glass insulator design that was specifically invented and produced for mine use has been designated the CD 185, patented by David N. Osyor of Columbus, Ohio ("Conductor support and insulator," no. 526,498, September 25, 1894). The design is cylindrical, indented on the top and bottom, with a groove for the wire around the waist and a threaded hole running all the way through for the anchor pin. The patent application states that the design is for an insulator for "electric light wires, trolley lines, &c. ...specially adapted for use in coal mines." He states:

> It is well known that there are serious difficulties to be met with in using the ordinary insulators, especially in wet or freezing weather, as the water freezes about the wires and short circuits the current, rendering the wire useless and making work over the wires an impossibility. Especially is this true in mines when electrical work is going on. My invention is designed to overcome these difficulties.

The through-hole is tapered and threaded for screwing onto the threaded anchor pin. The anchor pin is split longitudinally, so that the first half can be driven into a pilot hole drilled in the coal or rock, and then the second half is hammered into the hole beside it, acting as a wedge to tighten it. Osyor also provided a design for a hanger to be used in certain circumstances, and a pin with a 90-degree bend for mounting horizontally into a wall while keeping the insulator itself vertical.

Because mine insulators were designed to be installed overhead (the reverse of the positioning of most telephone pole insulators), often in wet mines with dripping water, Osyor provided his design with a pin-hole passing all the way through to allow water to drain out the bottom instead of running down the outside where the wire groove is. The anchor pins were specially equipped with a small drainage port to allow the water to pass harmlessly down through the center of the pin and out the bottom.

Osyor assigned his patent to Joseph A. Jeffrey, president of the Jeffrey Manufacturing Company, a specialist in industrial and mining equipment; Jeffrey then subcontracted for the production of the insulators through the Hemingray Glass Company. Other manufacturers soon took up the design as well.

N. Osyor

David Nevins Osyor, the designer and patentee of the first mine insulator, was born in Belleville, Ohio, in 1845, the son of French immigrants Philenia Phelps and Joseph Marshall Osyor (Osier), a laborer. In 1860, when Osyor was 15 years old, he was working as a farm laborer; two years later he enlisted to fight in the Civil War, serving in Company F of the 9th Ohio Cavalry. He rose to the rank of sergeant, and was widely reported to have fired the last shot of the war on April 17, 1865. In 1870 he was made a life member of Temple Chapter, Royal Arch Masons, and he was also a member of the Mt. Vernon, Ohio, Commandery No. 1 of the Kinghts Templar.

In 1874 Osyor married Emma (or Emeline) Stevenson in Henry, Ohio. The 1880 census for Marysville, Indiana, lists him as a saddle-maker, living with Emma and two young daughters Lulu and Una (a third daughter, Ona, was born in 1885).

Osyor was working as an electrician and mining engineer by 1894, and was granted patent no. 526,498 on September 25, 1894, for a "Conductor- support and insulator." It is clear from the text of Osyor's patent that he had already been using his ceiling-mounted or wall-mounted glass insulators with their attachment spike in coal mines. The maker of his pre-patent prototype insulators remains open to speculation.

As of 1900, Osyor was still living in Columbus, Ohio, listing himself as an electrical engineer. In 1910 he was working as a policeman for the City of Columbus. The 1920 census for Columbus lists the same family, the daughters unmarried, with David (age 75) operating his own electrician business. The 1930 Columbus census shows him living alone at the age of 87 (actually 85), listing his occupation as "Technical engineer, Radios." He died in Columbus in 1935, at the age of 90.

At least six suppliers of note are known to have sold Osyor's CD 185 style of mine insulators: (1) the Hemingray Glass Company, (2) the Brookfield Glass Company, (3) the Jeffrey Manufacturing Company, (4) the Harloe Glass Company, (5) the Knowles Supply Company, and (6) the Mayer & Englund Company. But Knowles did not make their own insulators, Mayer & England appear to have obtained theirs from Brookfield, and Hemingray is known to have made the insulators for the Jeffrey Manufacturing Company (McDougald, 1972). So it seems likely that only Brookfield, Hemingray and perhaps Harloe actually manufactured the CD 185 insulators. The market for mine insulators was dominated by Hemingray, so Brookfield and Harloe examples are quite rare and no positively identified Knowles or Mayer & Englund examples have been found.

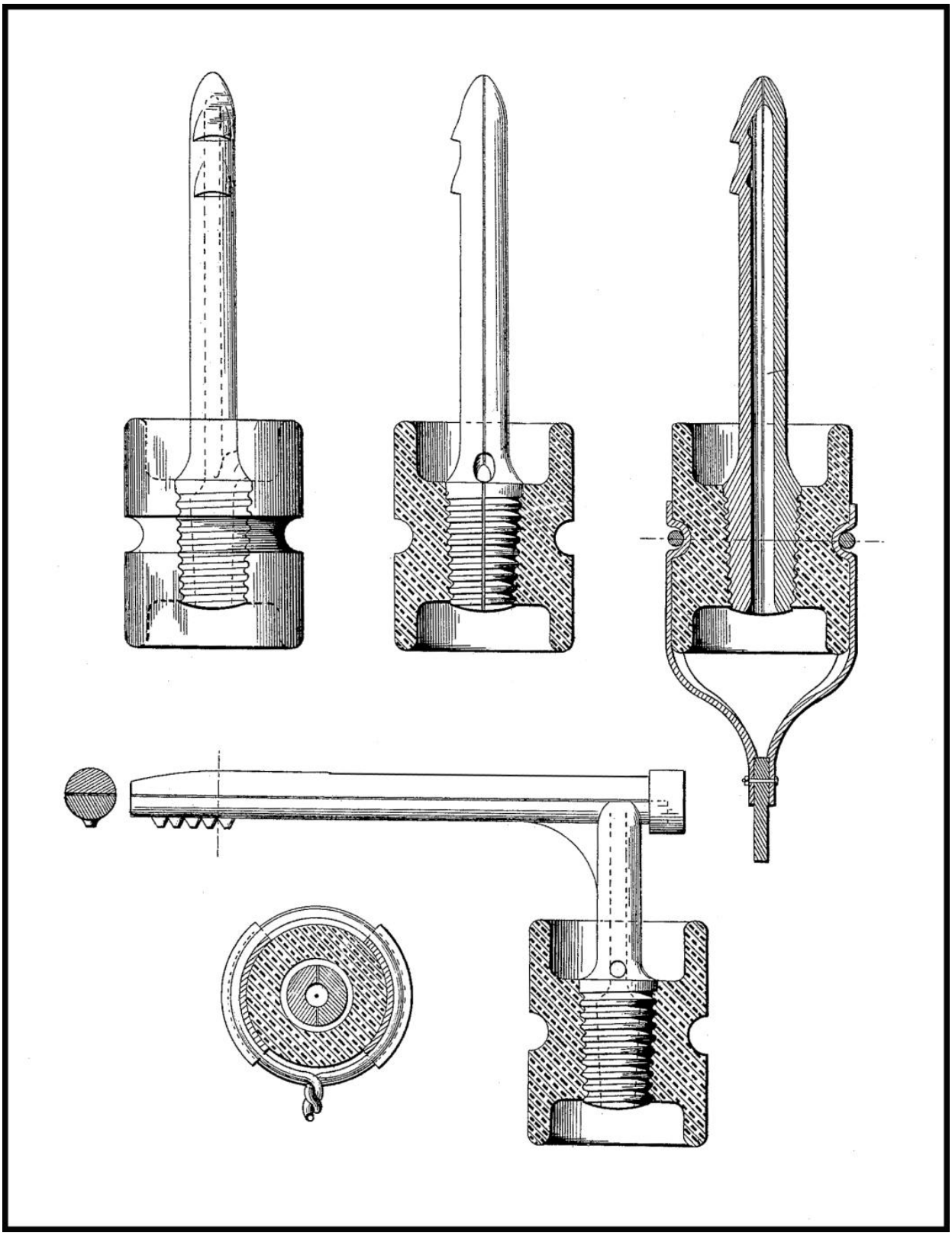

David Osyor Patent, the basis for the CD 185 mine insulator

Hemingray CD 185 Mine Insulators

Hemingray CD 185 mine insulators generally measure around 3.5 x 2.9 inches, though they can range from about 3.4 to 3.9 inches tall. The known varieties of embossing on Hemingray CD 185 insulators produced between 1893 and the 1920s, are shown in Table 1.

"MINE INSULATOR" Smooth bottom (Hemingray CD 185) (author's collection)

"***HEMINGRAY – 95" (Hemingray CD 185) (author's collection)***

"SPECIAL MINE INSULATOR" "JEFFREY MFG. CO." (inverted embossing) Hemingray-made CD 185 (author's collection)

"***SPECIAL MINE INSULATOR" "JEFFREY MFG. CO." (embossing right-side-up) Hemingray-made CD 185 (author's collection)***

But Which End is Up?

Interestingly, all examples of the Hemingray, Jeffrey and STAR CD 185 insulators that I have measured have a slightly tapered central pin hole that is wider at the *bottom* or skirt end (30 mm)—which is the end with drip points—than they are at the top end (27 mm), meaning that the anchor pin would have to have been screwed in from the bottom end, not the top as shown in the patent. How they could then be installed in the ceiling with drip points pointing downward is a mystery. Apparently no one worried about that, as an illustration in the 1909 Electric Services Supply Company catalog clearly shows an anchor pin screwed into the end having the drip points!

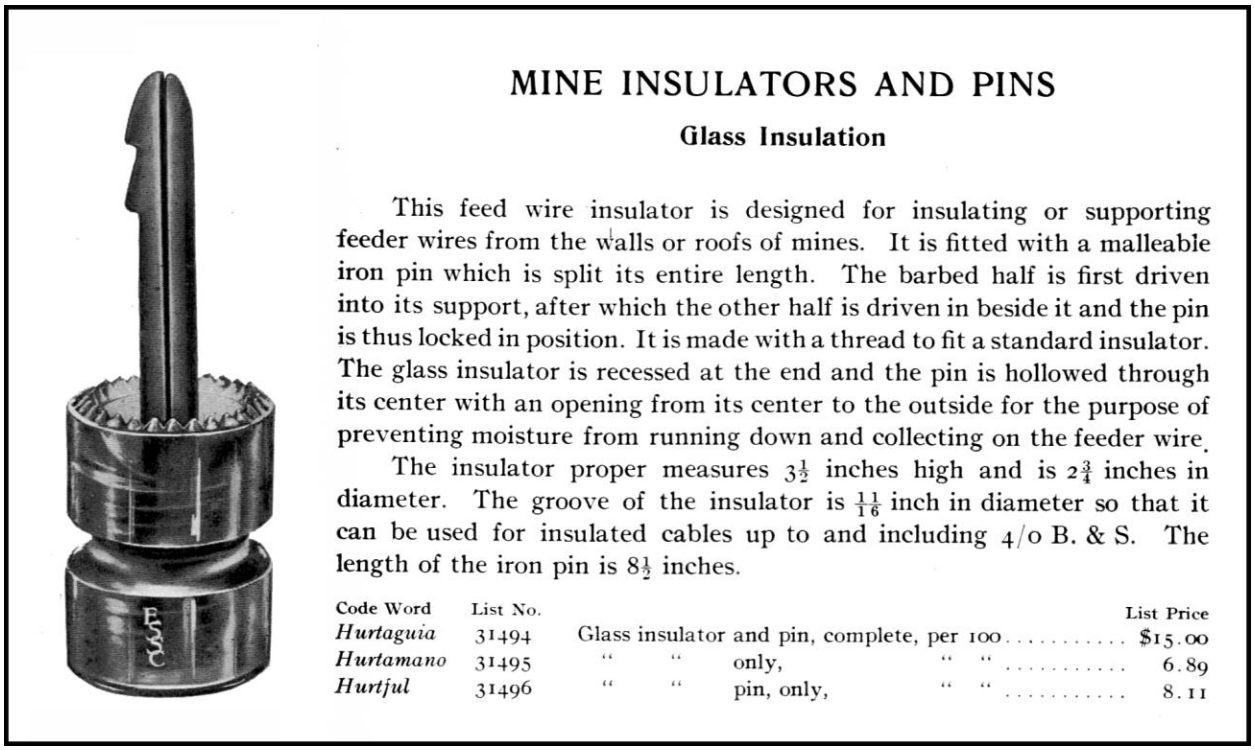

MINE INSULATORS AND PINS

Glass Insulation

This feed wire insulator is designed for insulating or supporting feeder wires from the walls or roofs of mines. It is fitted with a malleable iron pin which is split its entire length. The barbed half is first driven into its support, after which the other half is driven in beside it and the pin is thus locked in position. It is made with a thread to fit a standard insulator. The glass insulator is recessed at the end and the pin is hollowed through its center with an opening from its center to the outside for the purpose of preventing moisture from running down and collecting on the feeder wire.

The insulator proper measures 3½ inches high and is 2¾ inches in diameter. The groove of the insulator is 11/16 inch in diameter so that it can be used for insulated cables up to and including 4/0 B. & S. The length of the iron pin is 8½ inches.

Code Word	List No.		List Price
Hurtaguia	31494	Glass insulator and pin, complete, per 100	$15.00
Hurtamano	31495	" " only, " "	6.89
Hurtful	31496	" " pin, only, " "	8.11

Illustration in the 1909 Electric Services Supply Company catalog clearly showing an anchor pin screwed into the end of the insulator having the drip points, ready for installing in the ceiling of a mine. In that position the drip points could not function. The picture shows the insulator embossed with the letters "E.S.S.C." (Electric Services Supply Company) though none are known to have been made with that marking; it was most likely made by Hemingray.

Table 1. **Some Hemingray CD 185 variations (adapted from Hemingray.info). Distinctive features highlighted in bold.**

1) HEMINGRAY (*front skirt*) No. 95 (*back skirt*) (***smooth base, no drip points***)
2) HEMINGRAY (*front skirt*) No. 95 (*back skirt*) (***drip points***)
3) HEMINGRAY-95 (*front skirt*) MADE IN U.S.A. (*back skirt*) (*sharp drip points*)
4) HEMINGRAY-95 (*front skirt*) MADE IN U.S.A. "**No.95" blotted out**] (*back skirt*) (*sharp drip points*)
5) SPECIAL MINE INSULATOR / JEFFREY MFG.CO. (*front, above the groove);* COLUMBUS OHIO / PATENT SEPT. 25 1894. (*front skirt*) (drip points) (***inverted embossing***)*
6) SPECIAL MINE INSULATOR / JEFFREY MFG.CO. (*front, above the groove);* COLUMBUS OHIO / PATENT SEPT. 25 1894. (*front skirt*) (***drip points***)
7) SPECIAL MINE INSULATOR / JEFFREY MFG. CO. (*front skirt*); COLUMBUS OHIO **PATENT APPLIED FOR** (*back skirt*) **(*smooth base, no drip points***)
8) SPECIAL MINE INSULATOR / JEFFREY MFG. CO. (*front, above the groove*); COLUMBUS OHIO / PATENT SEPT. 25 1894. (*front skirt*) (***smooth base, no drip points***)
9) SPECIAL MINE INSULATOR / JEFFREY MFG. CO. (*front, above the groove*); COLUMBUS OHIO / PATENT SEPT. 25 1894. (*front skirt*) (***drip points***) (***inverted embossing***)*
10) SPECIAL MINE INSULATOR / JEFFREY MFG. CO. (*front, above the groove*); COLUMBUS OHIO / PATENT SEPT. 25 1894. (*front skirt*) (***drip points***)
11) SPECIAL MINE INSULATOR / JEFFREY MFG. CO. (*front, above the groove*); COLUMBUS OHIO / PATENT SEPT. 25 1894. ("**APPLIED FOR" blotted out**) (*front skirt*) (***smooth base, no drip points***)
12) SPECIAL MINE INSULATOR / JEFFREY MFG. CO. (*front, above the groove*); COLUMBUS OHIO / PATENT SEPT. 25 1894. (*front skirt*) (***drip points***) (***inverted embossing***)*
13) **SPECIAL MINE INSULATOR / JEFFREY MFG. CO. (*front, above the groove*); COLUMBUS OHIO / PATENT SEPT. 25 1894. (*front skirt*) (***drip points*)**
14) **MINE INSULATOR** (*front skirt*) (*smooth bottom*)
15) ?**No Lettering** (*suspected in glass but not confirmed; a white porcelain version is known*)

---

*It has been suggested that in some cases the drip points are on the wrong end, but the actual error is that the embossing is inverted. The drip points are always on the thin skirt end.

**Many other varieties of blot-outs and spelling errors are known.

Hemingray Glass Company

The Hemingray Glass Company was one of the most productive, innovative and long-lived insulator companies in history. The company produced not only glass insulators but also a wide range of glassware over its long history as well.

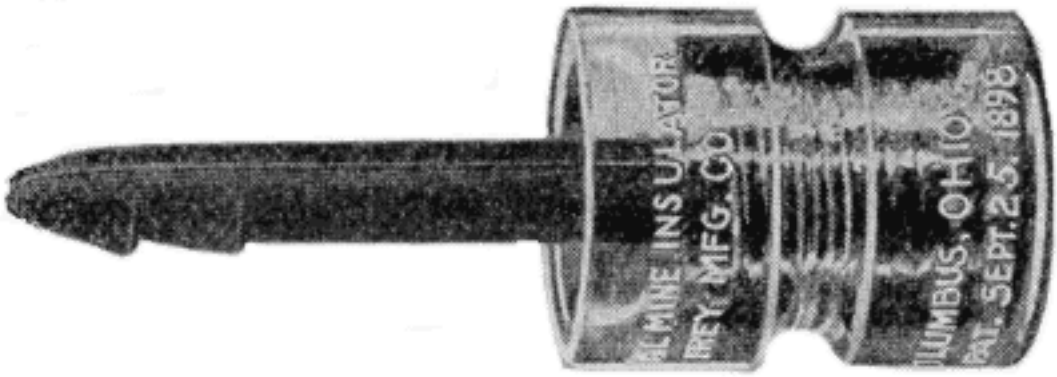

Jeffrey Manufacturing Company CD 185 "special mine insulator" (made by Hemingray) with anchor pin screwed into the petticoat end (Electrical Review, August 6, 1904)

The Hemingray Glass Company was founded in 1848 under the name of Gray & Hemingray, by partners Robert Hemingray and Ralph Gray in Cincinnati, Ohio. They started producing insulators in the 1850s with the production of lightning rod insulators and "telegraph glasses." In 1852, they moved their facilities to Covington, Kentucky, and went through several name changes in the 1850s and 1860s, finally incorporating as the Hemingray Glass Company in 1870. On December 19, 1871, Robert Hemingray patented an improved technique for molding insulators, and many of their early insulators are embossed with this date.

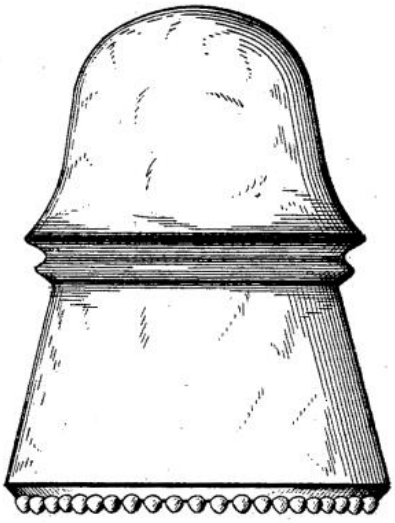

In 1888, Hemingray opened their second glass factory in Muncie, Indiana where insulator production continued. On May 2, 1893, Ralph G. Hemingray and James C. Gill received a patent on drip points, a feature designed to break the surface tension of water on the insulators and draw it down to drip off the bottom. Many Hemingray insulators were embossed with this patent date until well into the 1920s.

In the 1930s, Hemingray was purchased by the Owens-Illinois Company, and they began producing colorless transparent insulators as the "Hemingray Division." They also replaced the sharp, conical drip points with rounded drip points (though not on mine insulators). In 1937, Hemingray manufactured its one billionth glass insulator. The last Hemingray insulator was produced in 1967, and the Muncie, Indiana factory closed permanently in 1972.

Hemingray drip points patent drawing (1893)

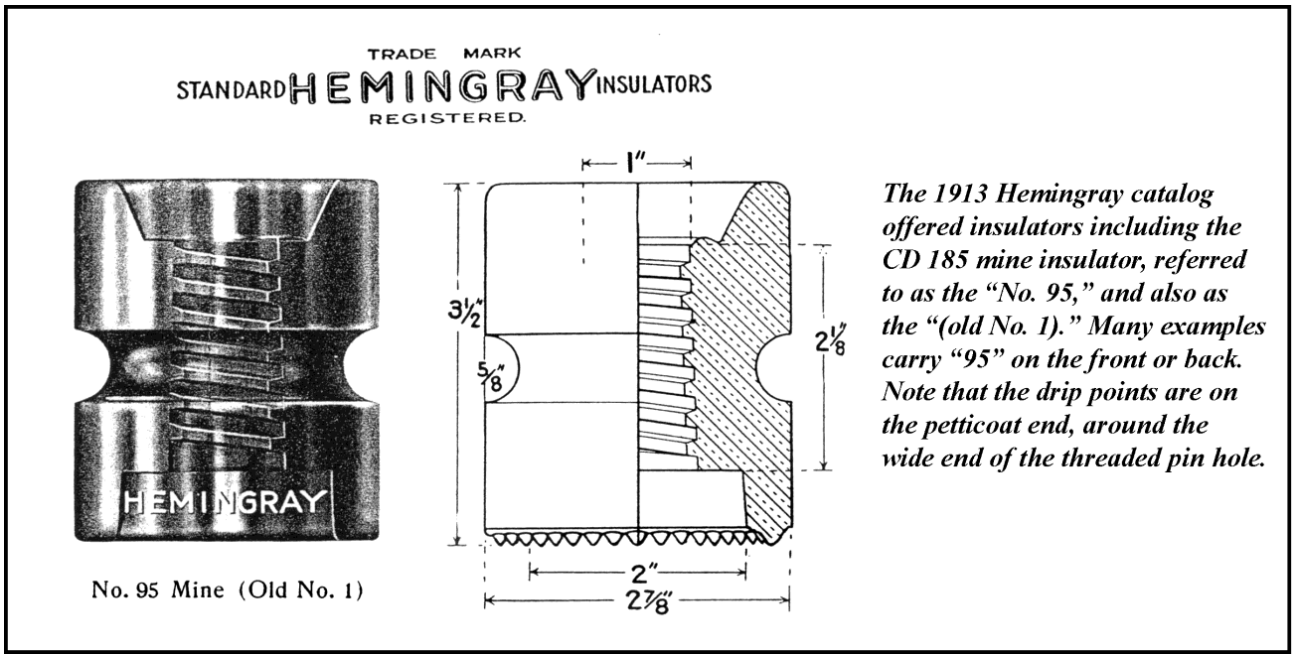

The 1913 Hemingray catalog offered insulators including the CD 185 mine insulator, referred to as the "No. 95," and also as the "(old No. 1)." Many examples carry "95" on the front or back. Note that the drip points are on the petticoat end, around the wide end of the threaded pin hole.

Brookfield CD 185 Mine Insulator

The Brookfield Glass Company was one of three or four companies that manufactured CD 185 mine insulators. The Brookfield CD 185 is characterized by an aqua color and an embossed "B" or "B-1" above the wire groove (McDougald and McDougald, 1990). Milholland (1873) lists "B" models with and without drip points. Milholland also lists a variation with "BROOKFIELD" embossed on the front, though I have not seen one. [NOTE: I have not seen a "B" example of the CD 185 either, so I do not know if it is any different from the "B-1."]

(left) Brookfield CD 185, embossed "B-1" above the wire groove. Bob Berry collection and photo. (right) 1912 Brookfield catalog illustration showing the "B-1" below the wire groove.

The same cut appears in the 1908 Western Electric catalog. Note the symmetrically concave top and bottom.

Brookfield Glass Company, in Brooklyn, New York and Old Bridge, New Jersey, was the producer of a vast number of beautiful insulators cherished by collectors today. Their factory, the Bushwick Glass Works, began in 1864 as a bottle manufacturing company located near the intersection of Grand Street and Morgan Avenue in the Bushwick area of Brooklyn. James Madison Brookfield (1813-1892) was apparently the manager. The owner and founder was Martin Kalbfleisch, who also owned the Bushwick Chemical Works, and served as mayor of Brooklyn for a time in the 1860s. Brookfield had purchased the Bushwick glassworks from Kalbfleisch around 1869. In later years his son William Brookfield and his grandsons joined the company as well.

Brookfield CD 185 "B-1" model with split anchor pin as in the Osyor patent. Dan Gauron collection and photo.

Many types of bottles and jars were made throughout most, if not all, of the life of the company. But the demand for glass insulators for telegraph and telephone lines began to increase rapidly in the late 1860s, and by the 1880s insulators constituted a large percentage of the company's glass production. Most of the insulators from the Brooklyn plant are of pale blue- aqua color, but a smaller number were made in shades of "true" green during this earlier period. Judging from the huge numbers still in existence, Brookfield was second only to the Hemingray Glass Company in total production of insulators. For approximately 57 years, vast quantities of insulators marked "W.BROOKFIELD" or "BROOKFIELD" or just "B" were produced. Recent research by Lee Brewer (personal communication) has revealed the heretofore unrecognized depth and importance of Brookfield's manufacturing and automation innovations, not just for glass insulators but also for porcelain insulators and bottle making in general. (Lee is working on a new book about Brookfield history.)

Probably some of the earliest insulator styles (circa 1864-1868) were unmarked with a manufacturer's name, and remain unidentified. Brookfield also made insulators for various telephone companies, railroads, and electric power companies, sometimes with embossed company initials. Brookfield is known to have made more than 100 different types of insulators throughout its history; tantalizingly, some of the ones illustrated in their 1912 catalog have never found as real examples.

The Brookfield Glass Company was officially incorporated in 1898 and reincorporated in 1908, after the Old Bridge production facility in New Jersey was opened in 1906. (No insulators are known marked "Bushwick.") Much of the later insulators made at the New Jersey location are in darker shades of aqua, "teal" and green, including emerald-green and olive-green. Production of glass insulators in New Jersey ended in either late 1920 or early 1921 (sources of information

vary) but the corporation was officially dissolved in September 1922. (The above is summarized from Russell, 2004).

Brookfield CD 1060 Mine Insulator

The 1912 Brookfield catalog also contains a diagram of an entirely different insulator, the "Brookfield No. 60—Mine Insulator," which Marion Milholland, publisher of the 1974 reprint of the catalog, identified as a CD 1060, a number that may have been given to a ceramic version. It looks more like a spool or knob, with a narrower, unthreaded, untapered pin hole and a much wider wire groove. No examples are known in glass, though porcelain examples might conceivably exist.

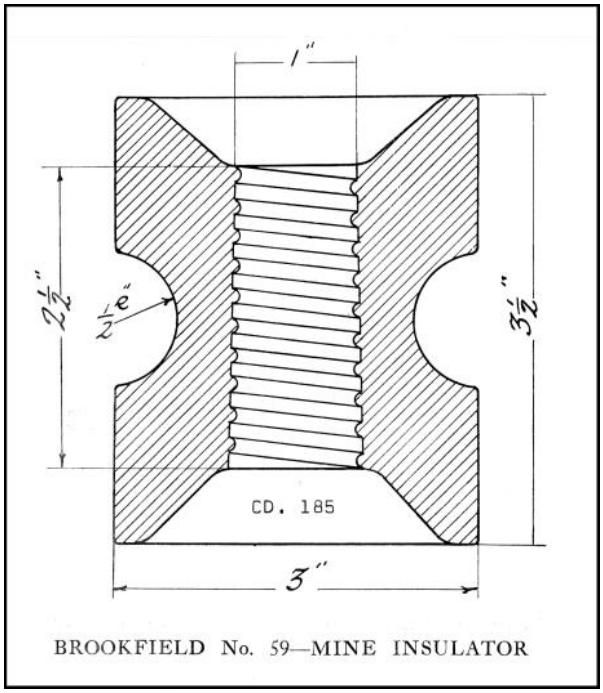

The 1912 Brookfield catalog illustrates a diagrammatic sketch of their CD 185 model, called the "Brookfield No. 59—Mine Insulator." It has a slightly tapered, threaded pin hole, and (unlike the Hemingray examples) is vertically symmetrical, with an identically concave top and bottom. This and the insulator below were also offered in the 1920 Northwestern Electric Company catalog, under "Brookfield Glass Insulators."

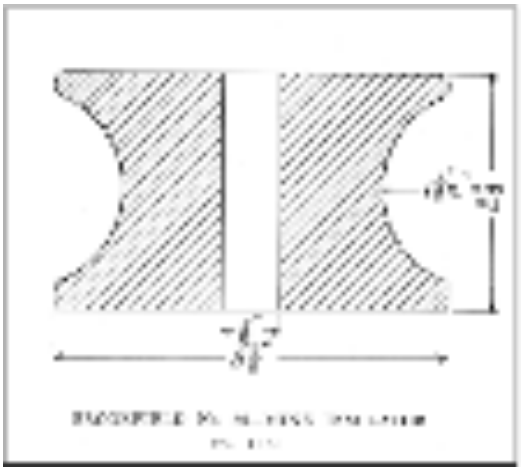

The Brookfield No. 60 Mine Insulator (CD 1060). This has all the characteristics of a knob or spool, but was called a glass Mine Insulator in the company catalog. No examples are known in glass, though they were offered in porcelain in the 1912 and 1920 catalogs.

A Note About Knobs —

Knobs can easily be confused with mine insulators because they have a through-hole for the pin, but they were generally not advertised as mine insulators.

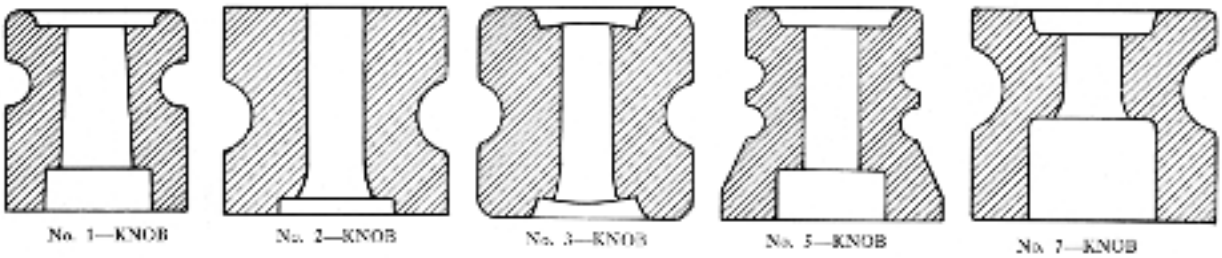

Brookfield knob designs with through pin-holes (1912 catalog); not identified as mine insulators.

The Brookfield catalog also illustrates five other varieties of comparatively small through-hole knobs, the No. 1 (= CD 1080), No. 2 (= CD 1104.1, No. 3 (= CD 1104), No. 5 (= CD 1095) AND No. 7 (= CD 1087.1), as well as a No. 8 and No. 9 (unillustrated). They measure 2 inches or less in height, with pin holes 0.5 to 0.38 inches in diameter.

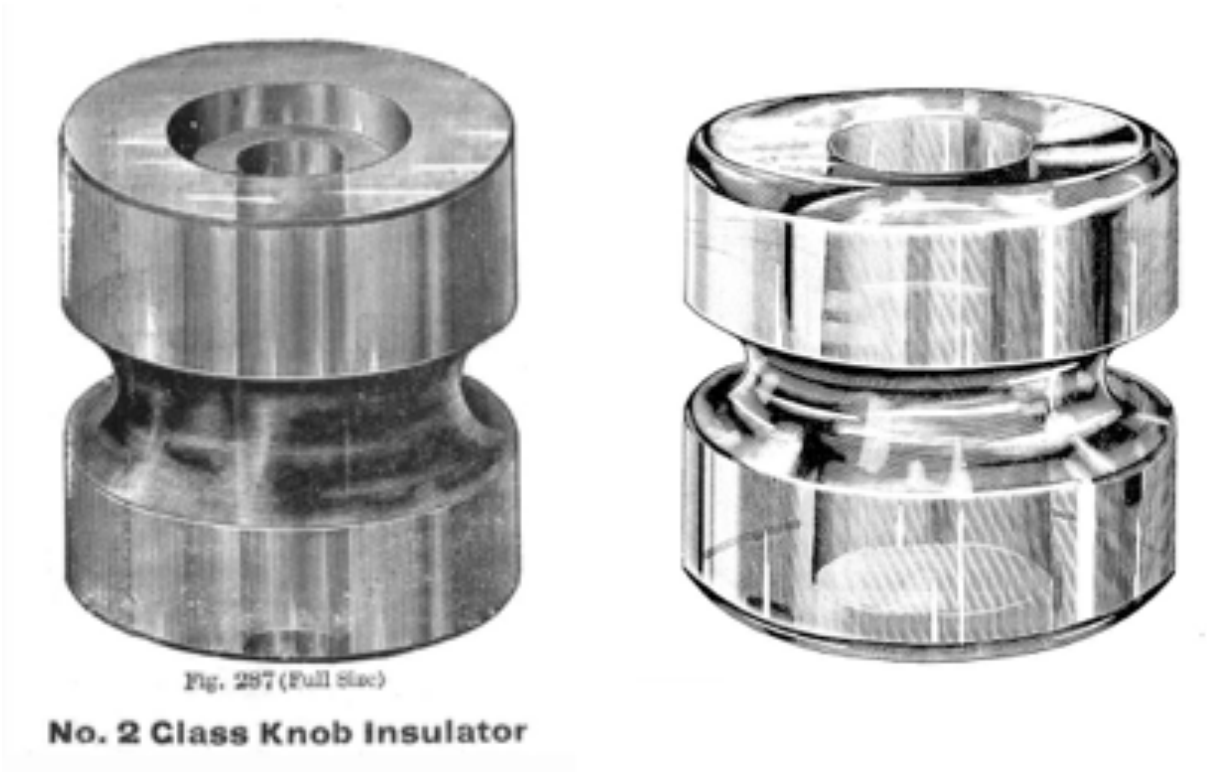

(left) Bunnell break knob (1899, 1902); not a mine insulator. (right) An unthreaded knob insulator illustrated in the 1892 Electric Supply Company Catalog. This is not a mine insulator.

Knowles CD 185 Mine Insulator

The Knowles Supply Company was a very well-known supplier of electrical construction material during the early 1900s. Their offices were located in Boston and New York City, with factories in Elmer and Trenton, New Jersey and Somerville, Massachusetts.

Knowles insulators are known in many designs that were in common use around the turn of the century, including some styles embossed "BOSTON." Knowles did not actually manufacture their own insulators, but is suspected of having subcontracted them from Brookfield and perhaps from the Novelty Glass Company (1901-1903) in Elmer, New Jersey (Maurath, 2007). Knowles insulators may be embossed "KNOWLES" and "PATENTED JUNE.17.1890," with their rectangular emerald-cut logo, or just with the letter "K."

The 1902 Knowles catalog lists many different varieties of insulators, including the CD 185"Mine Insulator." The catalog illustration shows no embossed lettering, and is depicted as part of the "Emerald Glass" line, along with an image of Knowles' faceted emerald logo, so presumably the insulator was colored emerald-green, but Knowles insulators are also known in shades of aqua, yellow-green and dark aqua-green. Sadly, no positively identifiable Knowles CD 185 examples have ever been found, nor has an un-embossed example like the one illustrated in their catalog.

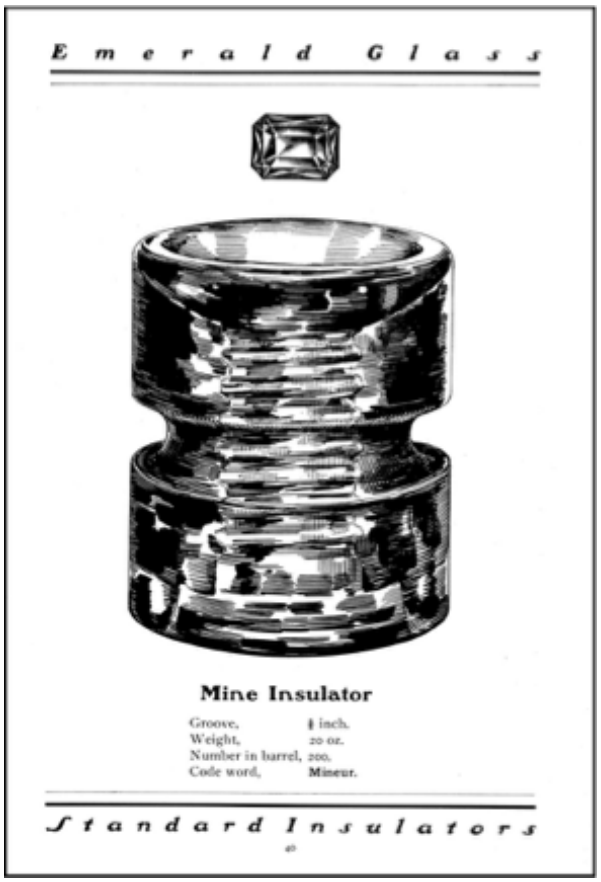

Knowles Supply Company catalog number twenty, 1902. The same cut appears in a 1906 catalog of the Central Electric Company. However, no CD 185 insulators are known that lack any embossing like the one shown in the illustration at left, nor are any known to have the typical Knowles embossing ("KNOWLES" or "BOSTON" or the patent date or just a "K").

STAR CD 185 insulator, aqua, Author's collection.

STAR CD 185 insulator, green, D. Anthony collection.

STAR ★ CD 185 Mine Insulators

Little is known about the origin of the STAR insulators (those marked only with a raised five-pointed star). A clue is offered by the 1904-1909 General Electric Company supply catalogs, which feature insulators embossed with the five-pointed star. But General Electric (founded in 1903) is not known to have manufactured their own insulators, and must have subcontracted them from another company. William L. Brookfield, a descendant of the Brookfield Glass Company's founder, stated that he believed the insulators embossed with the five-pointed star were made at the Brookfield plant at Old Bridge, New Jersey (McDougald, 1999). Woodward (1988) relates that General Electric had insulators made for them that were embossed with a raised five-pointed star. It seems safe to assume that the embossed five pointed star was intended as a seller's mark (not a maker's mark) for some General Electric products.

Brookfield, however, may not have been General Electric's only source. In 1902 to 1907, glass companies in Elmer, New Jersey included the Elmer Glass Works, the Sterling Glass Company and the Harloe Insulator Company operating the "Lower Works" and the Novelty Glass Manufacturing Company operating the "Upper Works." In 1980 the dumps of these factories were excavated by Ray Klingensmith, who found remnants of star-embossed insulators, so at least one of these companies must also have supplied STAR insulators to the General Electric Company.

Price guides show only one embossing design for CD 185 STAR mine insulators although, in reality, there are slight variations in dimensions. The insulator has a threaded hole and a smooth base made by a two-part mold. No examples have been found with drip points. Colors range from aqua to shades of lime-green, yellow-green and a rich, deep green. The star is positioned on the skirt, below the wire groove, but it is not always perfectly oriented with one point straight up.

Frank Sweis, in this “Star Tracks” web page (Sweis, 2004; insulators.info), provides a wide array of observations and speculations about the STAR insulators.

Harloe CD 185 insulator. Bill Kuhar collection and photo.

Harloe CD 185 Mine Insulators

The above example is the only Harloe Insulator Company CD 185 that I have seen. It is embossed, as all of their insulators were, with the company logo (superposed letters “H.I.CO.”) and address of “HAWLEY. PA. U.S.A.”

Morton Brock Harloe, the founder of the short-lived company, was born in Poughkeepsie, New York in 1862. He attended the Eldridge School in West Virginia, then returned to New York where he worked for the detective bureau of the Metropolitan Police force and studied electrical engineering. On March 21, 1899, he received a patent on a novel insulator design which he marketed as the “Harloe self-tying insulator.” It could hold a wire securely without the use of the usual fasteners.

Armed with additional insulator patents granted in 1901 and 1902, Harloe formed a new glass company in Hawley, Pennsylvania, producing bottles and canning jars as well as the standard telephone and telegraph insulators. By 1904 the company was running around the clock, employing up to 60 men turning out insulators and other glass products. Unfortunately the “self-tying insulator,” though it receiving good reviews, was not a successful seller.

In 1904 the company borrowed $8,000 that it was ultimately unable to repay. They were foreclosed upon, and in 1906 the property was sold at a sheriff’s auction for $60, and Morton Harlow sold his patents to the Brookfield Glass Company for $2,000 and a royalty of 25 cents per thousand insulators they might make. Brookfield then sold a half-interest to the Hemingray Company, but it is not known if they ever produced any insulators under the agreement. In any case, the CD 185 mine insulator incorporated none of Harloe’s patents and was probably made in very limited numbers; today it is extremely rare (McDougald and McDougald, 1990). Harloe and

his wife later moved to Winchester, Virginia where he worked as a power company electrical engineer. He died in 1926, at the age of 63.

Mayer & Englund CD 185 Mine Insulator

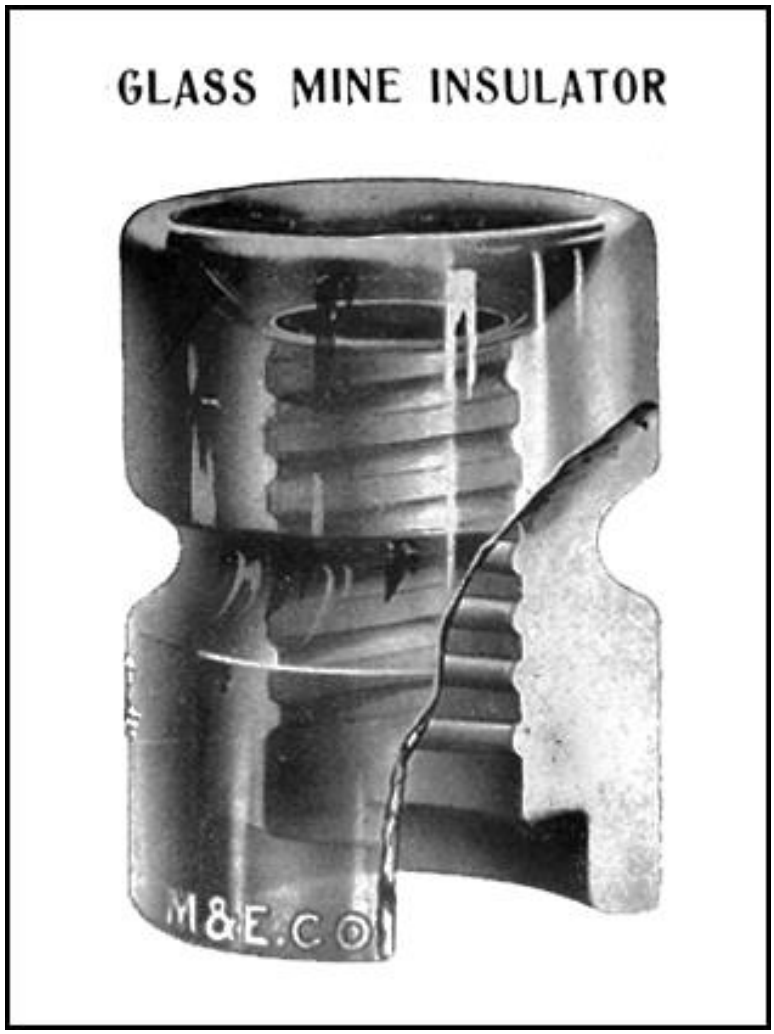

The 1902 catalog of the Mayer & Englund Company depicts a beautiful rendering of a CD 185 mine insulator that appears to carry an embossed "M&E.CO." name on the skirt, though no CD 185 insulator so marked has ever been found. But, interestingly, a few CD 252 insulators have been found that are marked "KNOWLES / CABLE INSULATOR" and "THE / M&E.CO. / PHILADELPHIA" on the front skirt. Perhaps some CD 185 examples were made with that lettering as well.

(left) CD 185 mine insulator from the 1902 Mayer & Englund catalog. The same illustration appears in the 1906 Electric Service Supplies Company catalog. No examples are known with this embossing

The Mayer & England Company in Philadelphia, founded in 1895 by Charles J. Mayer and Axel H. Englund, sold insulators from at least 1901 to 1906. The company specialized in construction equipment and supplies for the "railway, light, power and mine trade." Mayer and Englund also became principals in the Electric Service Supplies Company with warehouses in Philadelphia and Chicago (*Electric Railway Review*, 1906). In addition, the Mayer & Englund Company was the district representative of the Westinghouse Glass Factory, "manufacturers of a complete line of electrical globes, shades, etc. ... and artistic glassware of the most select quality" (and insulators, too) (*Street Railway Journal*, February 1896).

The Mayer & Englund catalog certainly suggests that they were selling or at least offering CD 185 insulators, but whether those insulators were made by Brookfield (Knowles' supplier) or perhaps even by Westinghouse, and whether they carried the "M&E.CO." lettering or not

remains unknown. Brookfield is the likely choice, though, since other insulators in the catalog appear to be Brookfield products not made by Hemingray.

CD 1025 (Charles King Patent) (from Pike, 2017)

CD 1025: King Patent (1901) Mine Insulator

A far rarer mine insulator model, the CD 1025, is a design apparently based on Patent 667,882, granted on February 12, 1901 (applied for in 1900) to Charles K. King of Mansfield, Ohio. It describes a "feeder wire insulator" designed "for firm anchorage in the side wall, roof or other convenient support in a mine." The only differences from the CD 185, aside from being unthreaded, are the provision for a notch for a locking washer to be attached on the bottom end, and a different design for the anchor pin. In the known examples, the top half is flared (a feature not present in the patent drawing), and is embossed "PATENT APPLIED FOR" both above and below the wire groove. Perhaps the flared top was designed to provide some extra umbrella-like protection to keep water from dripping on the wire groove. It measures 3.5 × 3.5 inches. Since its discovery in the 1970s, more specimens have surfaced, including pieces from the Hemingray dump attesting to manufacture there. Fewer than ten are known.

Charles Kelley King was born in Calais, Maine in 1867, the son of a wholesale grocer who developed an extensive shipping business. He was educated at the Calais Academy and received a degree in electrical engineering from Johns Hopkins University, then worked for various manufacturing firms before moving to Mansfield, Ohio in 1893 to work as an electrical engineer for the Ohio Brass Company. He was elected secretary by 1900, and that same year he also applied for his insulator patent—which he must have followed up on to at least a small extent since a few examples were manufactured.

The firm progressed from being a brass foundry to a leading manufacturer of equipment for electric railways, coal mines and electric power utilities. By 1910, King had risen to the position of vice president, and later was elected president and general manager. By 1930 he had become very wealthy, living in a $450,000 (!) Park Avenue home named "Kingwood" with his young wife and four servants. By the time he died at the age of 84, in 1952, he was chairman of the board of the Ohio Brass Company and also the Canadian Ohio Brass Company.

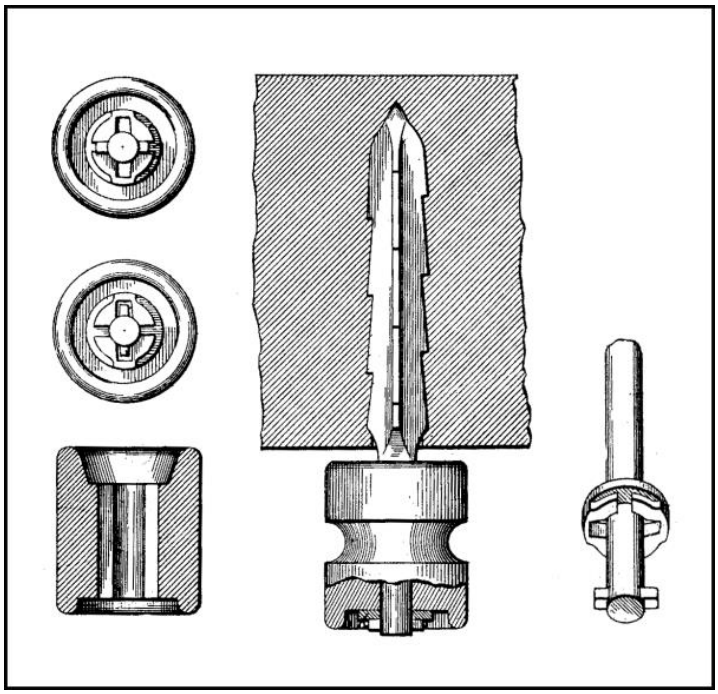

Charles King patent (1901), the basis for the CD 1025 glass mine insulator.

The 1913 catalog of the Electric Appliance Company of Chicago offers what clearly appears to be a variation of the Charles King patent of 1901. The shape of the anchor pin is identical, and the four-slotted end face is a metal locking washer as on the patent. The meaning of "semi-porcelain" is unclear—but they must have been at least part glass. An interesting addition is the coil spring to keep the insulator tight and prevent it from rotating out of its slot. In the illustration, the insulators are marked either with "O.B.Co." or a "B" in a circle (as a logo for the Ohio Brass Company).

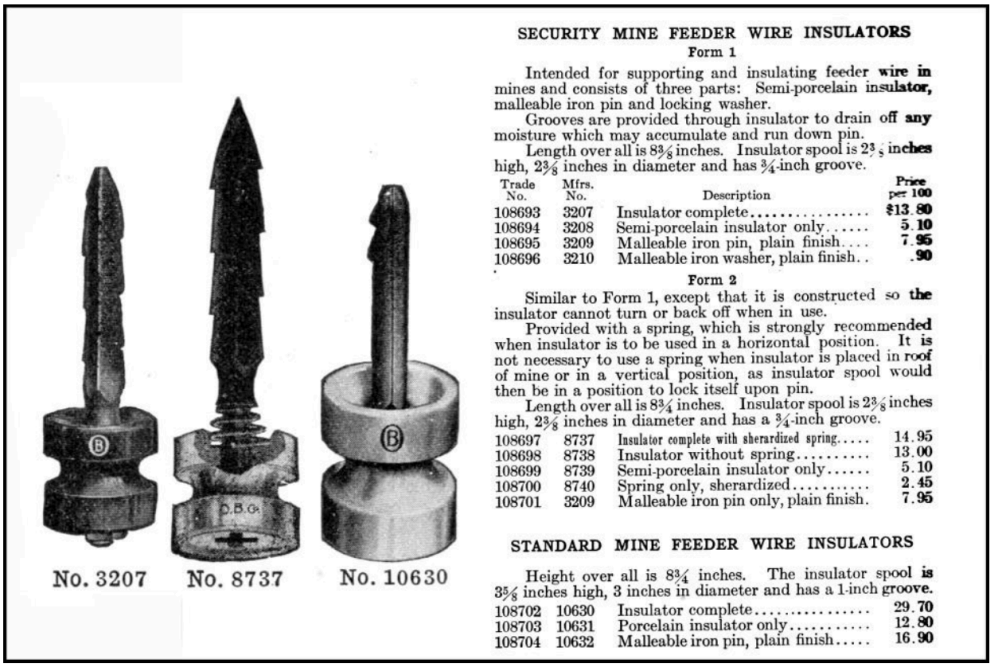

SECURITY MINE FEEDER WIRE INSULATORS

Form 1

Intended for supporting and insulating feeder wire in mines and consists of three parts: Semi-porcelain insulator, malleable iron pin and locking washer.

Grooves are provided through insulator to drain off any moisture which may accumulate and run down pin.

Length over all is 8⅜ inches. Insulator spool is 2⅜ inches high, 2⅜ inches in diameter and has ¾-inch groove.

Trade No.	Mfrs. No.	Description	Price per 100
108693	3207	Insulator complete	$13.80
108694	3208	Semi-porcelain insulator only	5.10
108695	3209	Malleable iron pin, plain finish	7.95
108696	3210	Malleable iron washer, plain finish	.90

Form 2

Similar to Form 1, except that it is constructed so the insulator cannot turn or back off when in use.

Provided with a spring, which is strongly recommended when insulator is to be used in a horizontal position. It is not necessary to use a spring when insulator is placed in roof of mine or in a vertical position, as insulator spool would then be in a position to lock itself upon pin.

Length over all is 8¾ inches. Insulator spool is 2⅜ inches high, 2⅜ inches in diameter and has a ¾-inch groove.

108697	8737	Insulator complete with sherardized spring	14.95
108698	8738	Insulator without spring	13.00
108699	8739	Semi-porcelain insulator only	5.10
108700	8740	Spring only, sherardized	2.45
108701	3209	Malleable iron pin only, plain finish	7.95

STANDARD MINE FEEDER WIRE INSULATORS

Height over all is 8¾ inches. The insulator spool is 3⅝ inches high, 3 inches in diameter and has a 1-inch groove.

108702	10630	Insulator complete	29.70
108703	10631	Porcelain insulator only	12.80
108704	10632	Malleable iron pin, plain finish	16.90

Electric Appliance Company catalog (1916); showing the Charles King patent, made or distributed by the Ohio Brass Company, of which King was president. I know of no straight-side examples in glass, but porcelain versions were advertised in Ohio Brass Company catalogs.

Hemingray CD 185.2 B.E.L.Co. mine insulator Christian Willis photo

The Hemingray B.E.L.Co. CD 185.2 Mine Insulator

A variation of the CD 185 has been designated the CD 185.2. It has been speculated that the name "B.E.L.Co." might stand for the Belmont Electric Light Company of Philadelphia, but no one knows for sure. The B.E.L.Co. insulators generally measure about 2.75 × 2.75 inches, and are known to have been manufactured by the Hemingray Glass Company (a threaded specimen was unearthed at the Hemingray dump in May 2008). Aside from their speculated use in mines, these were used in at least two other applications: In 2020, two of them were found as the middle insulator on a custom three-insulator bracket. Another specimen has been found with a hook attachment. Only a handful are known today.

OTHER MINE INSULATOR DESIGNS

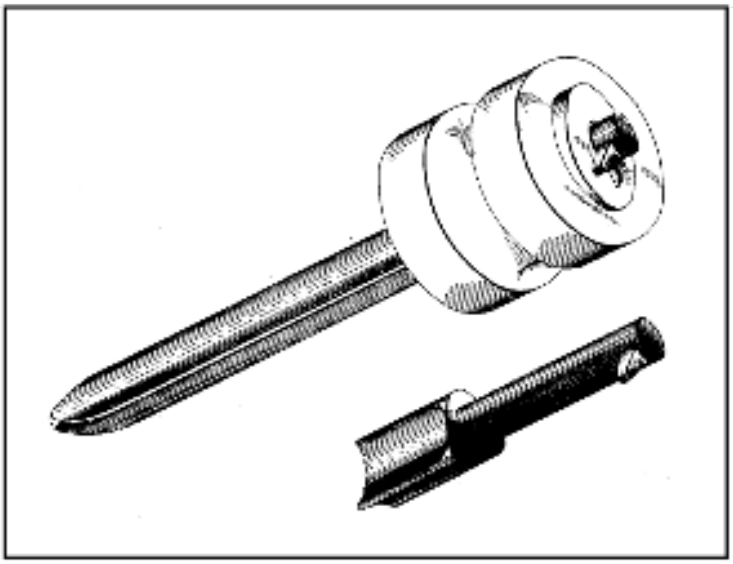

William Benbow Patent drawing (no examples known in glass)

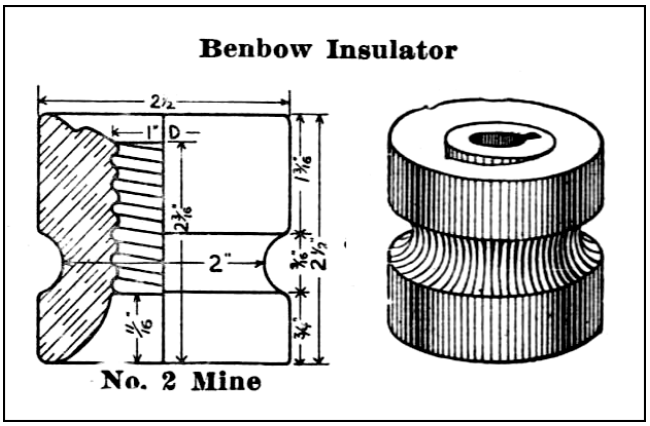

Illustration of the Benbow insulator in the 1915 Electric Supply and Equipment Company catalog. No example known in glass.

Benbow Patent (1902)

An insulator very similar to the CD 185, but with an unthreaded pin hole and a locking cam on the bottom end, was patented by William C. Benbow of Columbus, Ohio ("Wire-insulator," no. 696,665, April 1, 1902). The text states that the invention is for the "improvement of insulators for mine-wires." The central pin hole in the insulator has a groove or "key way" along its whole length, so that an anchor pin with a single "key-lug" on the end can pass through. The insulator is then twisted and the inclined, cam-like back face tightens it up against the key-lug. The groove in the hole would also facilitate the drainage of water.

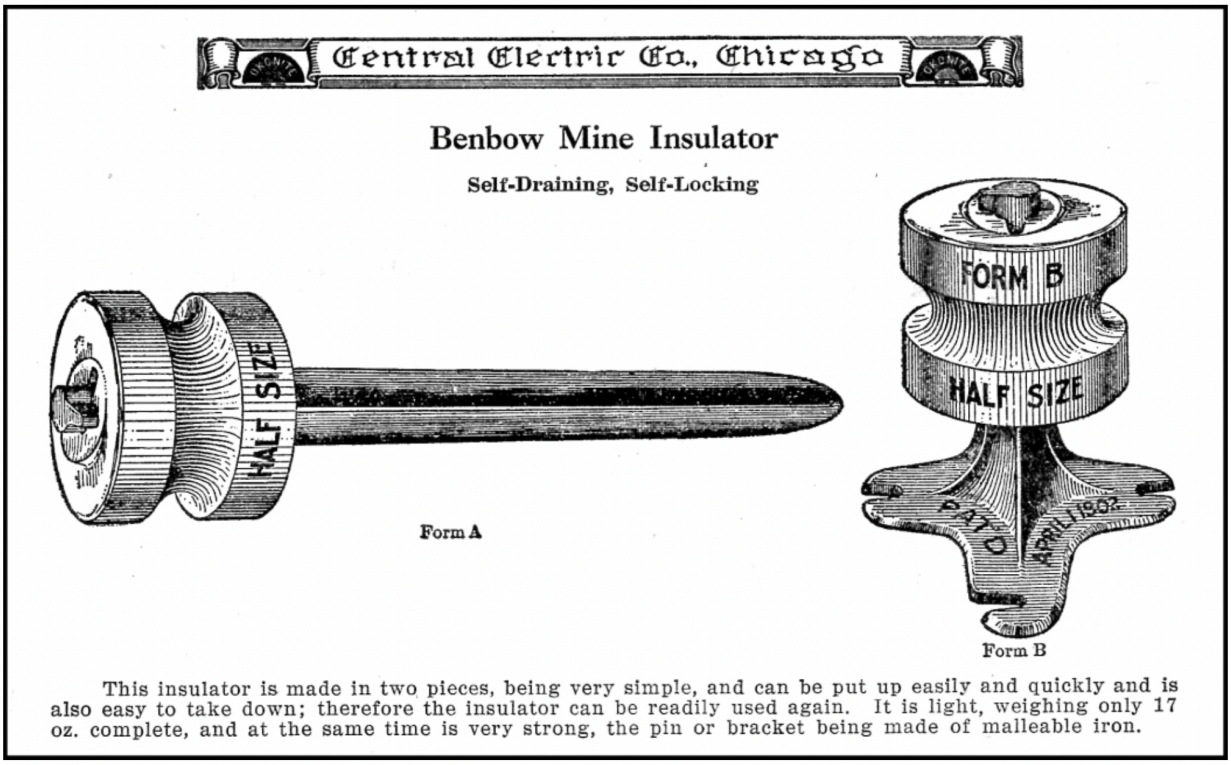

Although no examples are known to exist in glass, the Benbow patented insulator, anchor pin and an alternate mounting stanchion were offered for sale in the 1917 catalog of the Central Electric Company in Chicago. It was still being offered in the 1924 catalog, so one would think that at least a few were actually made and sold.

The basic design concept was copied six years later by George M. Finckel, who filed and was granted an essentially identical patent. There is no corresponding CD number because no examples are known to exist, although a porcelain version was advertised as well (*Electric Services Supply Company catalog*, 1909). The Finckel Patent is more likely to have been manufactured, at least in small numbers, as it appeared in an ad in the Western Electric yearbook for 1916 (see below).

William Coffin Benbow was born near Greensboro, North Carolina in 1869. He listed his profession in 1915 (by which time he had moved to Cleveland) as an "engineer-salesman." He died in New Orleans in 1938.

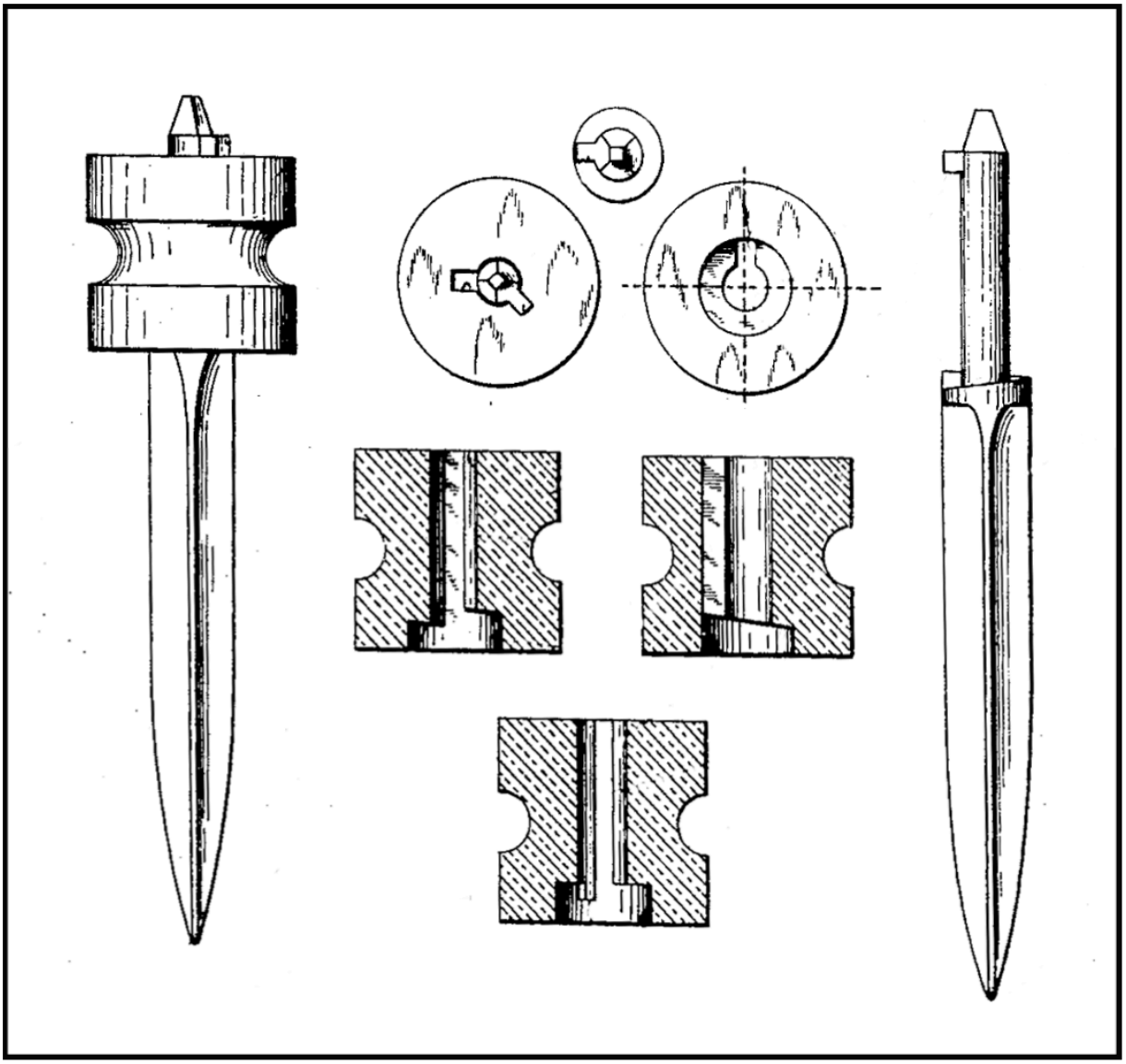

George Finckel Patent (no examples known in glass)

Finkel Patent (1908)

The King patent of 1901 is similar to this later Geroge M. Finckel patent ("feeder wire insulator," no. 903,692, November 10, 1908, which also has an unthreaded key-way through the central hole and an angled cam-like face for tightening the anchor pin's "key-lug" via a twist.

Finckel assigned his patent to the Sackett Mine Supply Company of Columbus, Ohio. The patent says the anchor pin is to be driven "into the coal or other wall," verifying its intended use in mines.

George M. Finckel, the patentee, was born in Washington, DC, in 1862 and worked as a lawyer and patent attorney in Columbus, Ohio. He died in 1947.

GEORGE M. FINCKEL.

LAWRENCE A. SACKETT
Pres. & Treas., The Sackett Mine Supply Company

The Sackett Mine Supply Company was founded by Herbert R. Sackett (1849-1910), and by 1910 he had turned the presidency over to his son, Lawrence A. Sackett. Herbert Sackett was born in Kingsville, Ohio. At the age of 13 he learned telegraphy, and became a telegraph operator for the railroad in Upper Sandusky, Ohio; during the Civil War he served in that capacity for the Union Army. He then took business courses at Eastman's Commercial College in Poughkeepsie, and in 1871 was hired as manager of the Atlantic & Pacific Telegraph Company in Columbus. He went on to serve as a bookkeeper and telegrapher for a coal company for nine years, then established his own coal mining company in Sandrun, after which he served as superintendent and manager of several other coal companies. In 1902 he established the Athens Electrical Supply Company, then moved the company to Columbus under the name of the Sackett Mine Supply Company. The business flourished, with Sackett serving as Secretary and Treasurer (*Centennial History of Columbus and Franklin County, Ohio* by W. A. Taylor, 1909; and obituary in *Industrial World*, July 11, 1910).

The illustration below of a Sackett mine insulator and anchor pin (after the Finckel patent) is in Western Electric's *Electrical Supply Yearbook* (1916). It shows embossing on the base: "SACKETT PAT'D NOV.10.08", the date of the George Finckel patent, which he assigned to the Sackett Mine Supply Company of Columbus, Ohio. The anchor pin also carries the embossed name "SACKETT". The lettering on the insulator and pin may or may not have been added by the artist. In any case, *No insulators with the Finckel notch or the "SACKETT" lettering have been found,* but the ad suggests that some may have been manufactured.

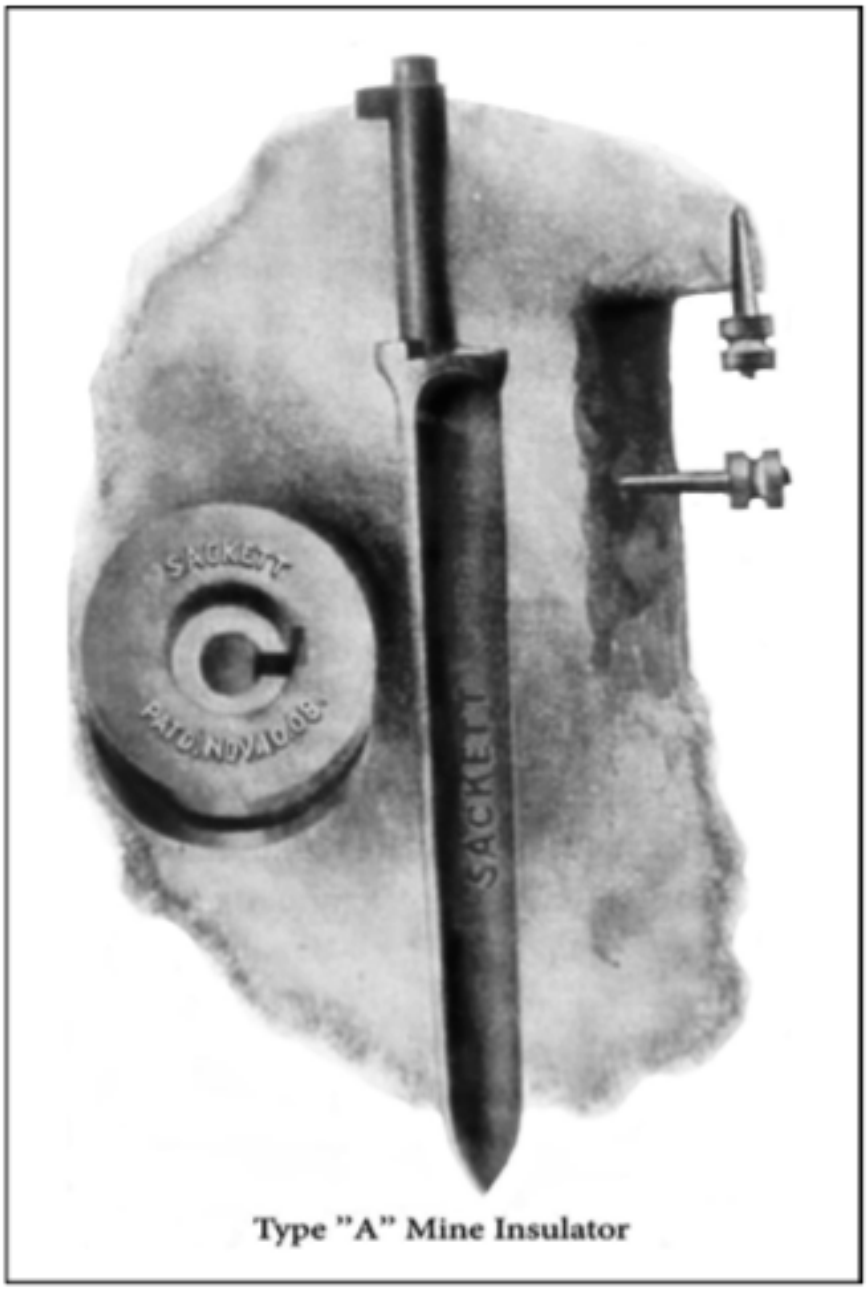

The Sackett "Type A" mine insulator and anchor pin as illustrated in the Western Electric's Electrical Supply Yearbook (1916). It shows embossing on the base: "SACKETT PAT'D NOV.10.08", the date of the George Finckel patent, which Finckel assigned to the Sackett Mine Supply Company. No examples known in glass.

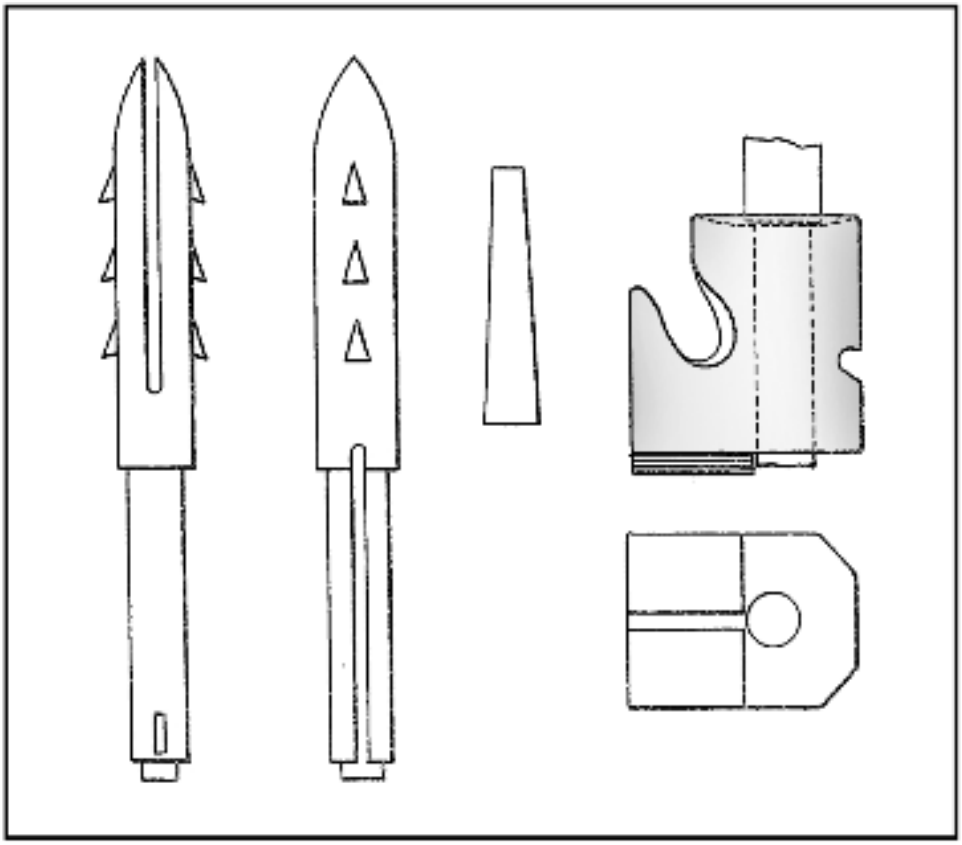

Charles Speakman Patent (no examples known in glass)

Speakman Patent (1910)

A mine insulator with a typical anchor pin design incorporating a drainage groove but with an asymmetrical side-slot for the wire was patented by Charles W. Speakman of Monongahela, Pennsylvania ("Mine Insulator," no. 971,322, September 27, 1910). It includes a locking plate on the bottom to secure the insulator and prevent rotation about the anchor pin. There is no corresponding CD number because no examples are known to exist.

Charles Wilfred Speakman was born in Boston, Massachusetts in 1880, the son of Lizzie and Alf Speakman, an engineer. He appears on the 1900 Monongahela, Pennsylvania census as an electrician, and is also listed in the Monongahela City Directory as an electrician. On the 1910 Monongahela census he is listed as an electrician in a coal mine. By 1920 he was the proprietor and electrician of the Auto Service Company in Monongahela, but he must have done poorly because in 1921 he was sued by Gulf Refining Company for failure to pay for oil and gas he had purchased from them. As of 1923 he was listing himself again simply as an electrician. He died in Pittsburgh in 1949.

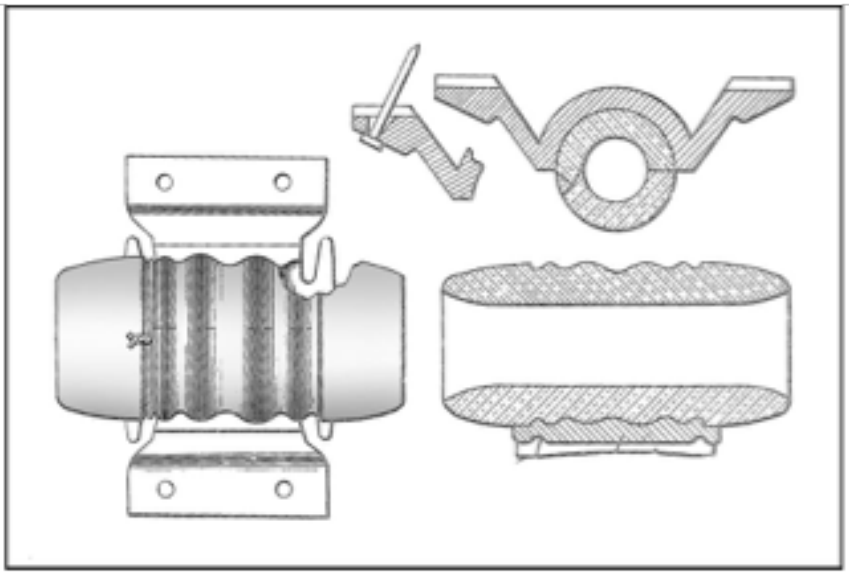

Frederic Warren Patent (no examples known in glass)

Warren Patent (1912)

A through-hole mine insulator patented by Frederic A. Warren of Canon City, Colorado ("Mine-insulator," no. 1,031,975, July 9, 1912) is unique in that the power cable runs though the central hole in the insulator where the anchor pin would normally go, and the body of the insulator is then secured in place by tie wires. Warren describes the problem addressed by this design in his text:

> By way of explanation, I will state that in mines, and elsewhere, where falling debris is encountered, such falling material frequently engages the wiring of the mine. The wires are commonly fastened rigidly to an insulator, and when the falling rock or other material strikes the wire, the wire is broken, the insulator is torn down, or the wire is slid forcibly along the insulator, thereby stripping the insulation from the wire.
>
> One of the objects of the present invention is to provide an insulator which will support a wire, without interfering with the longitudinal movement of the wire, the construction being such that, when falling material strikes the wire, the same will yield longitudinally, there being upon the insulator, no element which closely engages the wire, to prevent free longitudinal movement thereof.

In other words, the wire can slide easily through the center hole of the insulator. Of course the disadvantage is that every insulator must be strung onto the power cable from the end, like a string of beads, before installation can be completed. The mounting bracket is designed for attachment to a mining timber by nails or spikes rather than for anchoring into rock.

Frederic A. Warren was born in Burlington, Vermont, where as a young man he learned the machinist's trade. The 1900 Denver City Directory lists Frederic A. Warren as an engineer for the Electrical Engineering & Machinery Company, but he soon left that company. In the trade journal *Electrical Engineering* (1912) he was listed as the General Electrician for the Colorado Coal and Iron Company in Canon City, a position he had held since 1900.

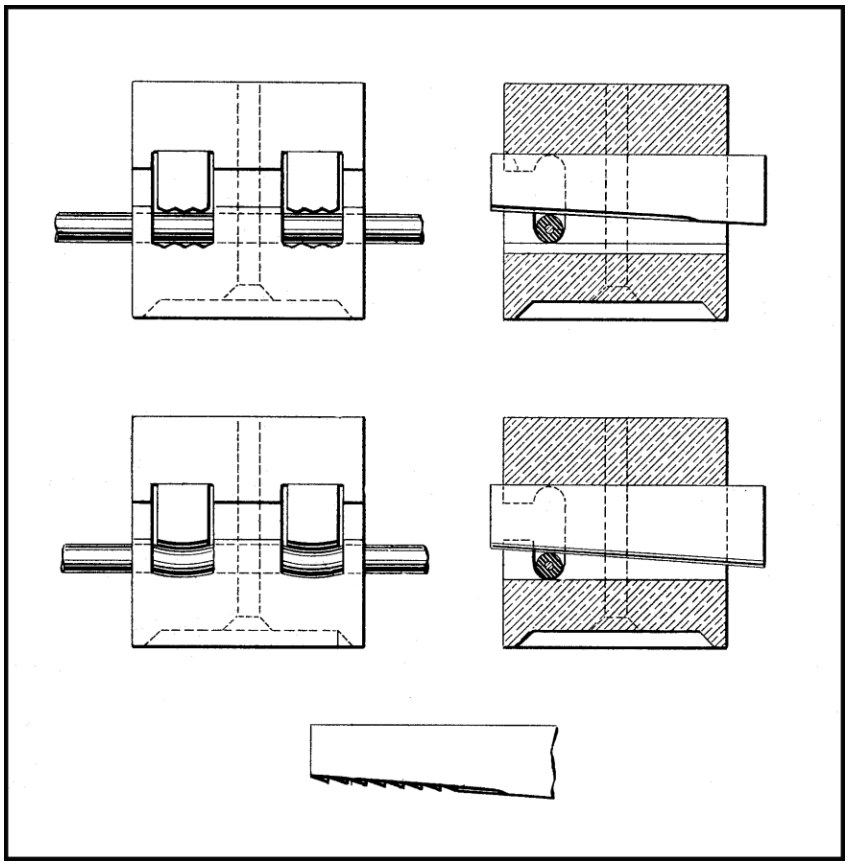

Pierce Patent showing a cubical insulator with two styles of dual locking wedges (no examples known in glass)

Pierce Patent (1917)

The last of the mine insulator patents is that of Frank C. Pierce of Campbird, Colorado ("Insulator," no. 1,213,002, January 16, 1917). Although mining use is not explicitly specified in the patent papers, the intention is clear enough, and Campbird was the site of the big Campbird mine, so this invention is classed as a mine insulator.

The unique aspect of this design is that the power cable sits in a side slot and is secured in place by wedges. The anchor pin passes through a hole between the two slots for the wedges, at 90 degrees to the path of the power cable. The insulator has a roughly cubicle shape. Manufacturing such a complex object from glass would be a challenging problem for mold makers, which may explain why no examples have ever been found, and consequently no CD number assigned to the design.

Frank C. Pierce was born in South Dakota in 1895, the son of a farmer. By 1910 he was living in Holly, Powers County, Colorado. By 1917 (when he filed his patent) he was living in Campbird, Colorado, location of the famous Camp Bird mine, discovered in 1896 by Thomas F. Walsh, who would go on to become one of Colorado's most successful mining men (his daughter, Evelyn Walsh McLean, later purchased the Hope Diamond).

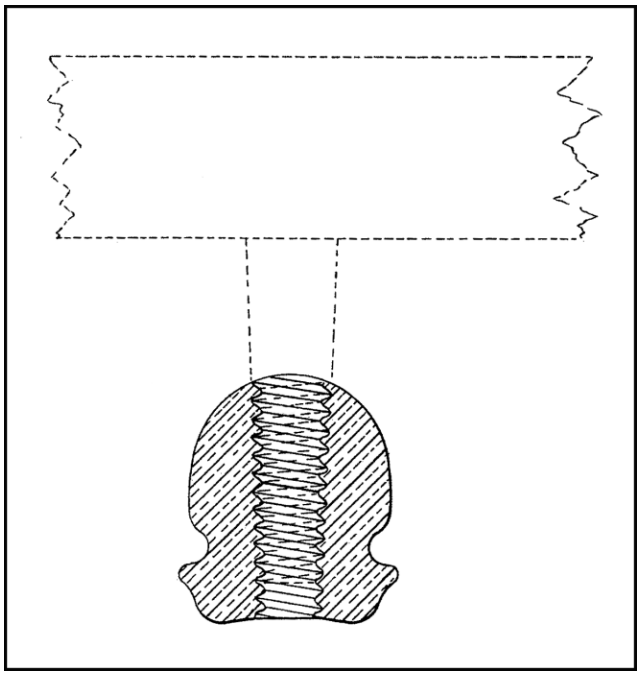

Robert G. Brown Patent, 1886

"DUPLEX" OR "PONY" INSULATORS

The CD 187 and 188 "duplex" or "pony" through-hole insulator designs were patented by Robert G. Brown of Brooklyn, New York (patent no. 353,120, November 23, 1886). Small insulators of various designs were often called "ponies" just because of their size, and the ones shaped like Brown's patent are sometimes referred to as "Brown's ponies." Because of the through-hole they are often called "mine insulators" by collectors, although they were intended primarily for use in mounting lines on the bottom side of telephone pole cross arms, doubling (thus "duplex") the number of lines a telegraph or power pole could carry.

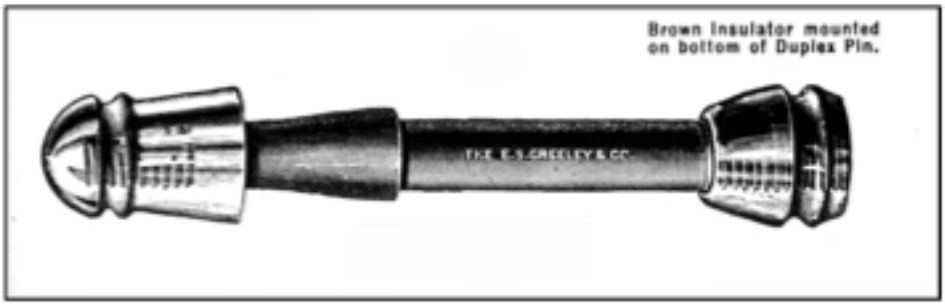

"Brown's pony" insulator from the 1912 Brookfield catalog

They required a through-hole for the same reason that a mine insulator does (water drainage), but the usefulness in mines was not mentioned in Brown's patent (he calls it "for telegraph and analogous line wires...to be secured on the lower side of a cross arm"). The CD 185 mine insulators are more robust in size and shape, to withstand the rough treatment they were liable to receive underground (and indeed most examples are damaged).

Other small glass knob or spool-like insulators have been assigned design numbers CD 1049-1110. They typically have an unthreaded hole in the center for mounting and a wire groove around the outside. They were most commonly used for dead ending a communication or power line and are often found mounted on racks on the sides of buildings where the wires enter the building.

Duplex insulators, as mentioned, are all smaller and somewhat less robust than the CD 185, but nonetheless were occasionally used in mines. CD 187 and CD 188 models have been found around the mining town of Wallace, Idaho, so it is possible that they were used underground there. Hemingray 107 and No. 7 pony insulators have actually been collected underground in the now-closed Homestake mine in Lead, South Dakota.

Hemingray No. 7 (Collected underground)

Hemingray CD 187

The CD 187 is called a "Brown or Duplex Pony Insulator" on page 49 of the 1912 Brookfield insulator catalog (listed as their No.73). The CD 188 is called a "Brown or Duplex Deep Groove Insulator" and was listed as their "Brookfield No.72" in the catalog. The CD 187 is referred to as a Brown's pony, or Duplex Pony in other period catalogs as well.

CD 186, 186.1 and 186.2 are experimental pieces and no one really knows how they were intended to be used. The 1915 Western Electric catalog lists a "Brown duplex locust|oak bracket." It is a long pin with threads on either end; the CD 187 Brown's insulator goes on the bottom end.

ACKNOWLEDGMENTS

My sincere thanks to Bill Meier (of the Insulator Collectors on the Internet—ICON group), Brookfield specialist Lee Brewer (insulators.info), Ray Klingensmith (Pole Top Discoveries Collector Services), Shaun Kotlarsky (hemingray.net), Christian Willis (hemingray.info), John McDougald, Eric Halkyard, Dave Johnson, Bob Berry, Dan Gauron, Dwayne Anthony, and Gene Hawkins for helpful information and/or illustrations. Special thanks to Lee Brewer for reviewing the manuscript prior to publication, and to Elton Gish for posting all of those old insulator catalogs in high-resolution scans on the National Insulator Association website—well worth the price of membership!

PORCELAIN INSULATORS

Porcelain mine insulators are outside the scope of this article, but most designs of mine insulators were made in white porcelain as well as glass. Some, however, were unfortunately never made in the much more attractive glass, like this double-groove porcelain-only model offered for sale in the 1915 catalog of the Electric Supply and Equipment Company. If only....

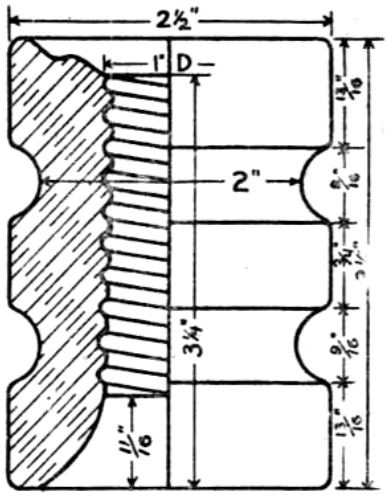

No. 4 Mine

REFERENCES

BROOKFIELD (1912) *The Brookfield Glass Co. Insulators. Catalogue No. 51 – 1912.* Brookfield Glass Company, New York, p. 54 and 55.

BRUNER, M. (2000) *The Definitive Guide to Colorful Insulators*. Atglen, Pennsylvania: Schiffer Publishing Ltd.

BURGER, B. (2003) A History of the Star Insulators. https://www.insulators.info/articles/star.htm

MAURATH, J. (2007) *A History of New England Insulators*. www.insulators.info/articles/neweng.htm

McDOUGALD J., and McDOUGALD, C. (1990) *History and Guide To North American Glass Pin Type Insulators, vol. 1, California Glass Insulator Company*. Self-published, 2 vols.

McDOUGALD, C. (1999) A conversation with William L. Brookfield. *Crown Jewels of the Wire*, December.

MILHOLLAND, M. C. (1969) *Milholland's Glass Insulator Reference Book No. 2.* Self-published.

MILHOLLAND, M. C. (1972) *Most About Glass Insulators*. Self-published.

MILHOLLAND, M. C. (1973) *Milholland's Suggested Insulator Price List 1973.* Self-published.

PIKE, M. A. (2017) CD 1025, A wonderful find. *Crown Jewels of the Air*, March, p. 46.

RUSSELL, D. (2004) "Brookfield Glass Company (Bushwick Glass Works)." https://glassbottlemarks.com/brookfield-glass-company/

SWEIS, F. (2004) Star Tracks. https://www.insulators.info/articles/startracks.htm

SWEIS, F. (2016) Natsulators: Star Tracks. http://natsulators.com/misc/stars.php

TIBBETTS, J. C. (1967-1968) *A Guide for Insulator Collectors*, 2 vols.

WOODWARD, n. r. (1969) *The Glass Insulator in America: 1969 Report*. Press of Premier, 88 pages.

WOODWARD, N. R. (1988) *Report: Glass Insulators in America*.

The Mysterious "No-Name" Blasting Cap Tins

Douglas Miller

In 2007, while on a business trip to New Mexico, I got the chance to visit Jack Purson and John Kynor, Sr. I wrote about it on the Eureka Forum in a post dated September 5, 2007:

This last week, while on a business trip, I had the great pleasure of visiting Jack Purson and John Kynor and seeing their cap tin collections. Jack's collection includes the two No. 7 DuPont 25-count tins that are the only known examples of the tin. Jack also has a wonderful example of the round Illinois tin – white with the beautiful black font, and a mint Peerless- Whitehaven tin. In addition to tin collecting, Jack and I talked about mineral collecting and exploring old mines. Each of us used to do a lot of that when we were in college. Jack says that John got him started in cap tin collecting. John is a retired bomb squad guy. By his own account, John lacks about five tins to make his collection complete. John's collection is like an encyclopedic reference to blasting cap tins. He has tried to assemble examples of all known variations of each tin. . . . I really enjoyed meeting, talking with and seeing the wonderful collections of these two men. Both are real gentlemen. Each of us confessed a desire to write an updated book on blasting cap tins, following Andy Martin's terminology and Andy's convention for identifying variations among tins. John is already working on that, using his own collection as the reference. I got a chance to take a look at what John has done so far, and it's great. John hopes to have his book available for the Tucson show in February. I'm going to be one of the first buyers. I bought three nice tins from them, that will be among the best tins in my collection. These may be familiar to those of you who have been collecting for a lot longer than I have, but I was really excited about finding such nice examples of these tins. Anyway, my thanks to Jack and John for a great trip.

One of the tins I acquired on my trip was a "no-name" No. 6, 25-count tin that strongly resembles the round, yellow Hercules Powder Company tins of the early to mid 1900's. Another example of this tin recently sold on eBay for $217.50.

John Kynor completed and published his "Blasting Cap Workbook — Tins and Boxes" in 2008, a must have resource for cap tin collectors. He lists the No. 6, 25-count "no-name" tin on page 5 of his Workbook and pictures the tin in Plate 2. Andy Martin shows the top of this tin in the Addendum to his 1991 Blasting Cap Tin Catalogue. John pictures the 10-count version of this tin in Plate 5 of his Workbook. Andy's Addendum also shows the top of a "no-name" No. 6, 10-count tin. John states that these "no-name" tins have been attributed to Hercules and are thought to have

preceded the analogous tins that have the full Hercules logos and legends. John also states that the “no-name” tin also exists in 100-count containers. If memory serves me, a No. 6, 100-count “no- name” tin sold on eBay not long ago. Sadly, I can’t find the listing.

For comparison, here are the analogous Hercules tins. They are some of my favorite tins. They are not rare, but it is difficult to find them in near mint condition. That’s what you should strive for.

The 25-count Hercules tin is similar in height and diameter to the 25-count “no name” tin, but not identical. My 25-count Hercules tin is 1 3/4 inches (4.45 cm) in height and 1 1/2 (3.81cm) inches in diameter. My 25 count “no-name” tin is 1 5/8 inches (4.13 cm) in height and 1 7/16 inches (3.65 cm) in diameter. The Hercules tin is more rounded on the outer edges; the “no-name” tin has squarer edges and a flatter top. This shape difference could account for the slight differences in size. It seems reasonable to attribute the “no-name” tins to Hercules, but we cannot know for sure. On the other hand, if Hercules did not make and use these tins, who did? In any event, the “no- name” tins are rare and desirable, and are handsome, if plain, additions to any cap tin collection.

Early Illinois Blasting Cap Tins

Douglas Miller

Two of my favorite blasting cap tins are the early versions of the Illinois and the Western tins. I recently called folks attention to a very nice example of an early Illinois tin on eBay, and I had a discussion with John Kynor about another nice example of the early Illinois tin. John has also posted a lengthy note about the Illinois and Western tins on the Eureka Face Book page. Of course, the earliest version of the Illinois tins is the rare round, white example. But the early red tins of both companies are also very desirable. There are two versions of the early, red Illinois tins in my collection. One is bright red with gold lettering, the other is a darker red, brown-toned tin. Both have abbreviated legends, not the detailed warnings of the later tins, and they use an old-styled font that I love. The brown-toned tin in my collection is noticeably taller than the bright red tin. I believe that the brown-toned tin is the earlier of the two. Here are some photographs for comparison.

The bright red tin in my collection is 1 5/8 inches (4.1 cm) tall; the brown toned tin is 1 7/8 inches (4.8 cm) tall. The length and width of the two tins is identical. The top of the bright red tin measures 2 1/2 inches (6.5 cm) by 2 1/8 inches (5.5 cm). The top of the brown-toned tin also measures 2 1/2 inches (6.5 cm) by 2 1/8 inches (5.5 cm). The seemingly greater width of the brown-toned tin shown in the above photograph is an illusion, probably caused by the fact that the brown-toned tin was positioned slightly closer to the camera lens.

Andy Martin classifies these early Illinois tins as Very Rare (less than ten examples known). With the advent of eBay, it is difficult to estimate the number of these tins residing in collections, but in may experience, good examples of these tins are still hard to find and well worth having.

Frederic Baldwin's Adventures in Scranton

Dave Thorpe

Frederic Baldwin is aptly credited with introducing acetylene lamps to the mining industry. The inventor lived on Staten Island, NY with his mother and most Baldwin lamps seen today were manufactured by the John Simmons Co. of Manhattan. His lamps were first used one hundred miles east in Scranton's anthracite mines and for a short period of time Baldwin established manufacturing in that area. Few of these lamps survive today.

Baldwin lamp made in Scranton, ca. 1908.

Born into a wealthy family of jewelers,[1] it was unlikely that Baldwin would become an inventor of mine lamps and the path was convoluted. He spent teenage years at the Cheltenham College in England[2] and after returning to the United States, obtained his first patent in 1894 for a desk top oil lamp.[3] Following this, he submitted patents for various improvements on bicycles. He developed a working relationship with Albert H. Funke, whose family operated a large hardware business, and who was also fascinated with bicycles. Baldwin then patented an acetylene bicycle lamp that Funke produced, advertised and sold. Unlike other bicycle lamps of the day, the lamp had no side jewels or glass lens. In June, 1900, *Scientific American* published an article touting the new lightweight open-flame lamp that was claimed not to blow out in wind.[4] It did not fare well with bicyclists. Three months later Baldwin's Full Moon lamp "adapted for use in mines" appeared in *Engineering and Mining Journal.*[5]

The mining lamp soon gained attention. In 1901, a number of Baldwin lamps were installed in New York's subway and E. G. Spillsbury, a respected mining engineer, placed an order for Baldwin "hand lamps" to be tested in nearby zinc mines.[6] From this point on, Baldwin's open flame lamps were marketed only to the mining industry. Coal miners of the day used small hat-mounted oil lamps, and Baldwin addressed their custom by creating a small acetylene cap lamp. In 1906, *Engineering & Mining Journal* published an article based on interviews with Baldwin that included a depiction of his new small lamp.[7] Several are kept in the National Museum of American History - Smithsonian Institution.

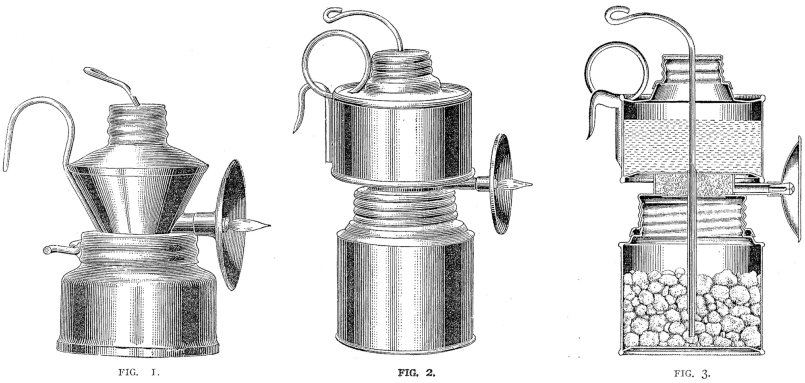

Baldwin's first cap lamp is shown at left along with the galvanized steel "Full Shift" lamp. *Engineering and Mining Journal*, July 21, 1906.

Left: Early Baldwin cap lamp from the National Museum of American History - Smithsonian Institution
Right: Early Baldwin cap lamp. Dave Des Marais collection.

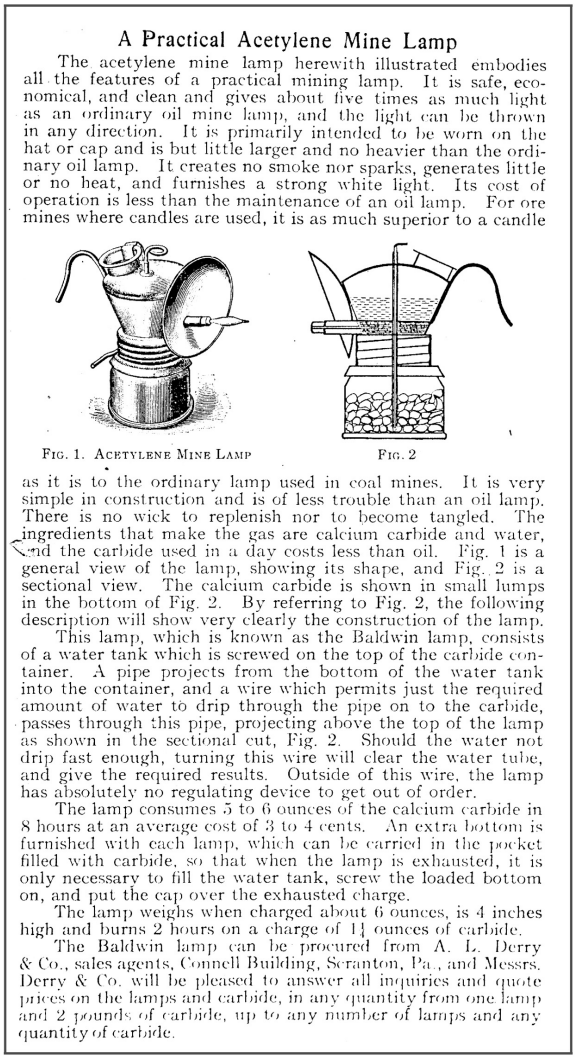

A Practical Acetylene Mine Lamp

The acetylene mine lamp herewith illustrated embodies all the features of a practical mining lamp. It is safe, economical, and clean and gives about five times as much light as an ordinary oil mine lamp, and the light can be thrown in any direction. It is primarily intended to be worn on the hat or cap and is but little larger and no heavier than the ordinary oil lamp. It creates no smoke nor sparks, generates little or no heat, and furnishes a strong white light. Its cost of operation is less than the maintenance of an oil lamp. For ore mines where candles are used, it is as much superior to a candle

FIG. 1. ACETYLENE MINE LAMP FIG. 2

as it is to the ordinary lamp used in coal mines. It is very simple in construction and is of less trouble than an oil lamp. There is no wick to replenish nor to become tangled. The ingredients that make the gas are calcium carbide and water, and the carbide used in a day costs less than oil. Fig. 1 is a general view of the lamp, showing its shape, and Fig. 2 is a sectional view. The calcium carbide is shown in small lumps in the bottom of Fig. 2. By referring to Fig. 2, the following description will show very clearly the construction of the lamp.

This lamp, which is known as the Baldwin lamp, consists of a water tank which is screwed on the top of the carbide container. A pipe projects from the bottom of the water tank into the container, and a wire which permits just the required amount of water to drip through the pipe on to the carbide, passes through this pipe, projecting above the top of the lamp as shown in the sectional cut, Fig. 2. Should the water not drip fast enough, turning this wire will clear the water tube, and give the required results. Outside of this wire, the lamp has absolutely no regulating device to get out of order.

The lamp consumes 5 to 6 ounces of the calcium carbide in 8 hours at an average cost of 3 to 4 cents. An extra bottom is furnished with each lamp, which can be carried in the pocket filled with carbide, so that when the lamp is exhausted, it is only necessary to fill the water tank, screw the loaded bottom on, and put the cap over the exhausted charge.

The lamp weighs when charged about 6 ounces, is 4 inches high and burns 2 hours on a charge of 1¼ ounces of carbide.

The Baldwin lamp can be procured from A. L. Derry & Co., sales agents, Connell Building, Scranton, Pa., and Messrs. Derry & Co. will be pleased to answer all inquiries and quote prices on the lamps and carbide, in any quantity from one lamp and 2 pounds of carbide, up to any number of lamps and any quantity of carbide.

In June, 1907, with much fanfare in the press, Baldwin traveled to Scranton to meet with A. F. Law, the president of Cross Engineering Co., a sheet metal fabricator. They established a formal contract to manufacture his patented lamp.[8] Two months later, The Baldwin Lamp Company was incorporated in Pennsylvania with a capital of $5,000.[9] Its five partners included A. F. Law as well as Llewellyn M. Evans, a local mine inspector who would later go on to create his own "Scranton" and "Scranto" mine lamps.[10] Evans was president of the firm and Baldwin (not a partner) would take patent royalties. In October, Pennsylvania State Representative D. F. Dempsey, a popular coal miner turned politician, called upon local newspapers where he promoted Baldwin's new lamp.[11] His praise was profuse, and one may surmise that he had been compensated for these efforts. In 1908, the lamp appeared in mining journals with A. L. Derry as sales agent. It was different from earlier Baldwins. While of the similar hour glass shape, the water door was now moved to the rear of the lamp, separate from the central water feed. They also used a forward tilted reflector — a hallmark of Scranton area lamps. Few survive today.

Above: *Mines and Minerals*, Vol. XXVIII, No. 8, March, 1908, 384. The article introduces A. L. Derry of Scranton as sales agent for the Baldwin cap lamp.

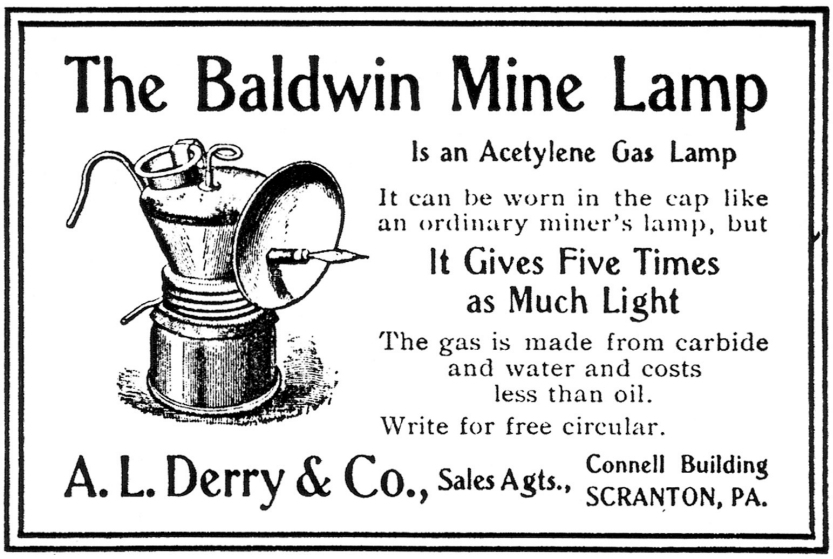

A. L. Derry advertisement from *Mines and Minerals*, August, 1908, 76.

Trouble soon began for Baldwin. He had previously contracted with John Simmons Co. (Manhattan), giving them exclusive rights to manufacture the lamp.[12] Whether related or not, Evans decided to completely disassociate from Baldwin. He began in late 1908 by hiring tinsmith David A. Williams (a relative), to fabricate and patent a new lamp.[13] The patent was filed on July 2, 1909 and four days later the company changed its name to The Scranton Acetylene Lamp Co.[14] Partners were now solely Evans, his wife, and his brother. The departure of partner A. F. Law, who had been in charge of manufacturing Baldwin's lamp, may indicate that production of lamps at Cross Mfg. Co. ceased or never began. Sales agent A. L. Derry was replaced with Francis Coffin. A new lamp emerged based on Williams' patent and was advertised as "The Scranton." Baldwin's hourglass-shape was gone as was his patented raking-wire water feed.

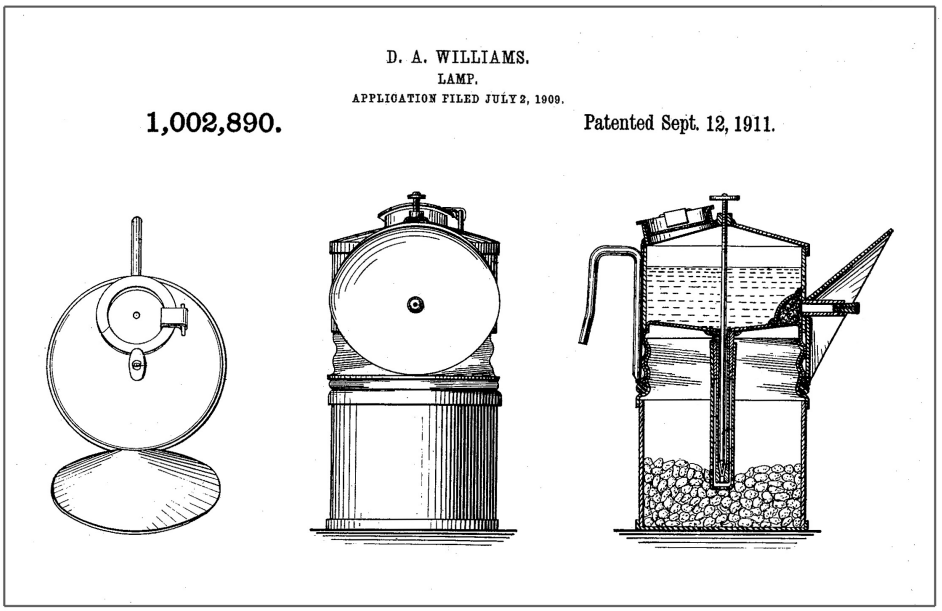

Above: Williams patent for The Scranton Acetylene Lamp Company. Evans later sued Williams who had assigned half interest to his nephew, David R. James instead of following his previous agreement to assign all patent rights to the Scranton Acetylene Lamp Company. Article below is from *The Scranton Republican*, November 11, 1911.

SUIT OVER LAMP.

Case that Involves Patent Rights Started by Local Company.

David A. Williams and David R. James were made defendants yesterday in a suit instituted in United States court by the Scranton Acetylene Lamp Company, in which the patent rights for the lamp manufactured by that company are involved.

Williams is a tinsmith and was employed, it is contended to make a lamp under the direction of a member of the company. He was to turn the patent rights over as soon as the lamp was patented, the plaintiff company alleges. Later Williams refused to live up to his agreement, it is alleged, and he assigned a half interest in the patent to his nephew, Mr. James.

Advertisement from *Engineering and Mining Journal*, December 31, 1910. Note the top seam on water tank matching the Williams patent. The seam is no longer present on ads beginning in mid-1911 and is not present on most Scranton lamps found today.

Squiggly Hook Attachments

Lamps from this transition period are characterized by a peculiar hook. The portion soldered to the lamp body had a squiggly S-shaped conformation, a feature that has been found on Baldwin hourglass shaped lamps as well as the very early Williams patent lamps.

Left: Rear view of Scranton-made Baldwin hourglass cap lamp seen on first page of this article. Author's collection.

Center: Early Scranton style lamp. PAT. APPLIED FOR stamp mark and top seam matches earliest "Scranton" advertisements. This lamp has no visible evidence of having had a tilted reflector. Note early bar on top of water-feed screw pre-dating the knurled wheel and the top seam on water chamber matching the earliest ads and the Williams patent. Dave Bunk collection.

Right: Early Scranton style lamp, identical in design to lamp in center. Author's collection.

Hughes Bros. who had been making similar appearing Victor lamps, is likely to have become the Scranton Lamp manufacturer. Detailed measurements have shown an orderly transition of Hughes' Victor lamps to the Scranton Lamp,[17] which in actual production looked more like the Victor than the Williams patent. Were the squiggly hook lamps a product of Cross Engineering's

brief stint with lamp-making? The general time frame is consistent with this, but it is also possible that Cross never produced the lamp at all and that Hughes Bros. manufactured the lamp from the beginning. It is certain however that the squiggly hook identifies a lamp as having been made in Scranton.

Disc Tip Cleaners

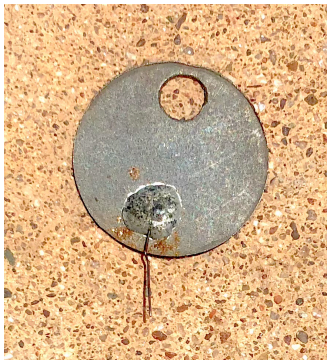

Unfired Victor lamps made by Hughes Bros. are found with small disc shaped tip cleaners stowed in their bases. They are identical to those found on early Baldwin lamps (ca. 1906) and have never been found with other lamps. In fact, when state representative Dempsey campaigned for the Baldwin lamp in 1907, he stated that 10,000 of the lamps were already in use locally and were being made in Scranton's Hyde Park — the Welsh district where Hughes Bros. was located.[16] Cross Engineering was in nearby Carbondale. All of this raises the probability that Hughes Bros. was a manufacturer of Baldwin lamps prior to Cross Engineering's brief involvement.

Left: Early Baldwin hand lamp with disc tip cleaner hanging from wire hook on water tank. Right Victor cap lamp with disc tip cleaner hanging from cap hook. Author's collection.

Baldwin responded to his abandonment by Evans in October, 1910 by bringing a patent infringement suit against The Scranton Acetylene Lamp Co. as well as their new sales agent Francis Coffin. After December, 1910, no further reports of the suit were published.[17] The Scranton Lamp was in fact so different from the Baldwin, it is doubtful that the suit was successful.

Baldwin withdrew from Scranton business interests and in 1911 renewed his contract with John Simmons Co. (Manhattan), reaffirming them as the sole manufacturer of his patented lamp, but also giving Simmons exclusive rights to sales.[18] Baldwin was not satisfied and began side ventures in New York, independent of Simmons. He put to market new lamps that did not follow his original patents including the Balco, Zar, and Black Diamond. These ventures were brief and Baldwin eventually sold all lamp patents to Simmons and left lamp designing entirely.[19]

End Notes

1. Baldwin Family, 1847–1892, Manuscript Group No. 1061, New Jersey Historical Society; Moses Bigelow, "The Manufacture of Jewelry in Newark," *Proceedings of the New Jersey Historical Society* 62 (1944): 207–9
2. Frederic and Herbert Baldwin were enrolled at Cheltenham College in September 1877, Andrew Alexander Hunter, ed., *Cheltenham College Register 1841–1889* (London: George Bell and Sons, 1890), 331; "School History and Archives," *Cheltenham College,* https://www.cheltenhamcollege.org/about-us/school-history-archives
3. U. S. Patent No. 520,200. Frederic E. Baldwin. Application filed November 15, 1893, patented May 22, 1894.
4. The Baldwin Acetylene Bicycle-lamp, *Scientific American*, June 23, 1900, 394.
5. The Baldwin Acetylene Lamp for Mines, *Engineering and Mining Journal*, September 15, 1900, 312-3.
6. This and That, *The Scranton Tribune*, June 27, 1901, 8.
7. Acetylene Lamps for Mines, *Engineering and Mining Journal*, July 21, 1906, 111.
8. Baldwin et al. v. Grier Bros. Co., District Court, W. D. Pennsylvania, *215 Federal Reporter*, No. 26, July 7, 1914, 736.
9. List of Charters of Corporations from June 1, 1907 to May 1, 1909. Pennsylvania Secretary of the Commonwealth, 1909, p. 14.
10. Records of the Commonwealth of Pennsylvania, Executive Department, show that the Baldwin Lamp Company was incorporated August 28, 1907, in Pennsylvania. Its members included L. M. Evans, Scranton, Pa. (President), W. L. Allen, Peckville, Pa., A. F. Law, Scranton, Pa., J. Von Bergen, Scranton, Pa., W. J. Frees, Scranton, Pa. (research by Bill Spence)
11. Novel Mining Lamp, *The Wilkes-Barre Times Leader*, October 23, 1907, 3. *The Wilkes-Barre News*, October 24, 1907, 4. Town Topics, *The Wilkes-Barre News*, October 24, 1907, 4.
12. Baldwin et al. v. Grier Bros. Co., District Court, W. D. Pennsylvania, *215 Federal Reporter*, No. 26, July 7, 1914, 736.
13. Suit Over a Patent Lamp in U.S. Court, *The Times-Tribune*, November 10, 1911, 20.
14. *Baldwin Lamp Company Change of Name to The Scranton Acetylene Lamp Company,* Commonwealth of Pennsylvania, Office of the Secretary of the Commonwealth. A Certificate, July 6, 1909 (research by Bill Spence)
15. Dave Des Marais, "Scranton and Scranto Cap Lamps," *Eureka! The Journal of Mining Collectibles*, Issue 9, January 1994, 19.
16. Novel Mining Lamp, *The Wilkes-Barre Times Leader*, October 23, 1907, 3. *The Wilkes-Barre News*, October 24, 1907, 4.
17. Lamp Companies at Law Over Patents, *The Tribune-Republican*, December 22, 1910, 3.
18. Baldwin (John Simmons Co., Intervener) v. Abercrombie & Fitch Co. (Justrite Mfg. Co., Intervener), Circuit Court of Appeals, Second Circuit, *228 Federal Reporter*, November 9, 1915, 896.
19. Gregg Clemmer, *American Miner's Carbide Lamps*, (Westernlore Press, 1987), 65. Clemmer cites Digest of Assignments, U. S. Patent and Trademark Office, October 11, 1918 - Vol. B., and lists all patents by number.